Commercial
Airplanes

737
Service Bulletin

ALERT

Number:	**737-53A1217**
Original Issue:	August 09, 2001
Revision 1:	September 08, 2022
ATA System:	5300

SUBJECT: FUSELAGE - Section 43 and Section 47 - Stringer 17 Skin Cracks at STA 360-380 and STA 888-907

BLANK PAGE

Table of Contents

ALERT

Number: **737-53A1217**
Original Issue: August 09, 2001
Revision 1: September 08, 2022
ATA System: 5300

Revision Transmittal Sheet

SUBJECT: FUSELAGE - Section 43 and Section 47 - Stringer 17 Skin Cracks at STA 360-380 and STA 888-907

This revision includes all pages of the service bulletin.

COMPLIANCE INFORMATION RELATED TO THIS REVISION

The Federal Aviation Administration (FAA) will possibly release an Airworthiness Directive related to this service bulletin. The Airworthiness Directive will make the compliance tasks and times given in this service bulletin mandatory.

Effects of this Revision on airplanes on which the original issue was previously done:

Group	Condition	Action
Group 1-3, Configuration 1	Airplanes that have not accomplished this service bulletin.	Do the initial High Frequency Eddy Current (HFEC) inspections at all locations.
Group 1-3, Configuration 2	Airplanes that have not done the terminating action.	Repeat the HFEC inspections at all unrepaired locations.
Group 1-3, Configuration 3	Airplanes that have installed a repair.	Do the post repair inspections at each of the repair locations.
Group 1-3, Configuration 4	Airplanes that have done the terminating action.	No further action required at that location.

Airplane variable numbers YE001-YE010 and YE101-YE104 were moved from Group 1 to new Group 3 of this service bulletin effectivity.

REASON FOR REVISION

This revision is sent to move airplanes from Group 1 to new Group 3, add new internal and external post repair inspections of the repair doubler, add new inspections for skin repair and add new repair figures for Group 3 airplanes. Post repair inspections are required by Part 26 compliance (Damage Tolerance Evaluation (DTE) and Damage Tolerance Inspections (DTI)) for the repairs given in this service bulletin.

This revision also updates the status of this service bulletin to ALERT. Boeing has determined the unsafe condition identified in this service bulletin to be airplane safety.

These sections were changed:

1. In Paragraph 1.A., Effectivity, added service bulletin index information and applicable line number information. Added new Group configuration table information.

2. In Paragraph 1.C., Reason, updated reason statement. Added reason for revision statement.

3. In Paragraph 1.D., Description: Added instructions for new post repair inspections and new affected maintenance zones.

4. In Paragraph 1.J.1., Existing Data, reference to PRR, Boeing SRP, Boeing Service Bulletin, Service Bulletin Index, Standard Overhaul Practices Manual (SOPM), Non-Destructive Testing (NDT) Manual, Aircraft Maintenance Manual (AMM), Structural Repair Manual (SRM) and Fleet Team Digest (FTD) are added.

5. In Paragraph 1.K.2., Publications Affected, Damage Tolerance Based Structural Inspections, new statements added.

6. In Paragraph 1.E., Compliance, updated compliance statement of work.

7. In Paragraph 3.A., General Information, added new general notes.

8. In Paragraph 3.B., Work Instructions, update work instructions format and high level work instructions to add post repair inspections.

9. Revised Figures, Appendix in accordance with procedure.

Vertical lines are put on the left edge of each page, except in Paragraph 1.A., Effectivity and format changes, to show the location of all content changes.

Pages with no vertical lines have no changes.

REVISION HISTORY

Original Issue:	August 09, 2001
Revision 1:	September 08, 2022

ALERT

Number:	**737-53A1217**	**Summary**
Original Issue:	August 09, 2001	
Revision 1:	September 08, 2022	
ATA System:	5300	

SUBJECT: FUSELAGE - Section 43 and Section 47 - Stringer 17 Skin Cracks at STA 360-380 and STA 888-907

THIS DOCUMENT IS SENT TO THE OPERATORS OF RECORD OF THE AIRPLANES SHOWN IN PARAGRAPH 1.A., EFFECTIVITY. IF AN AIRPLANE HAS BEEN LEASED OR SOLD, SEND THIS DOCUMENT TO THE NEW OPERATOR. IF APPLICABLE SPARES HAVE BEEN SOLD, SEND THIS DOCUMENT TO THE NEW OWNER.

CONCURRENT REQUIREMENTS

None.

BACKGROUND

Accomplishment of the inspection shown in this service bulletin will make sure that skin cracks at the double row of fasteners centered on Stringers S-17L and S-17R, at station (STA) 360 to STA 380 and at STA 888 to STA 907 are found and repaired. If this service bulletin is not done, continued operation with an undetected crack could result in possible rapid decompression and loss of structural integrity.

In production, a structural preload was created in the body skin during the installation of S-17. Analysis by Boeing shows that this preload, combined with pressure cycles, can cause cracks in the skin prior to reaching the Design Service Objective (DSO).

Engineering evaluation has shown that airplanes with this condition meet all FAA and JAA static strength requirements and are structurally satisfactory. Analysis indicates that the DSO may not be reached unless the preload condition is repaired.

Several airplanes have had inspections and/or repairs accomplished at STA 360 to STA 380. However, some of these airplanes still require an inspection to be accomplished at STA 888 to STA 907.

Accomplishment of the terminating action shown in this service bulletin will ensure that cracks do not initiate. Cracks will result in unscheduled time out of service to accomplish repairs.

For 737-600, 737-700, and 737-800 airplanes after Line Number 269 the sequence of assembly was changed to eliminate the preload.

Service bulletin 737-53A1217 R01 supersedes the damage tolerance inspection data given in service bulletin 737-00-1007 for service bulletin 737-53-1217 R0 Figures 6, 8 and 9. Service bulletin 737-53A1217 R01 also adds post repair inspections for existing Figure 7.

ALERT **ALERT**

Boeing Service Related Problem (SRP) 737NG-SRP-53-0598 is related to this service bulletin.

Boeing Fleet Team Digest (FTD) 737NG FTD 53-19001 is related to this service bulletin.

This table is provided to operators for planning purposes only. Refer to the applicable sections for more information.

Planning Data	Affected	Reference
Spares Affected	No	Paragraph 1.A.2., Spares Affected
AD Related	Yes	Paragraph 1.E., Compliance and Paragraph 1.F., Approval
Weight and Balance Change	Yes	Paragraph 1.H., Weight and Balance Changes
Electrical Load Changed	No	Paragraph 1.I., Electrical Load Data
Publications Affected	No	Paragraph 1.K., Publications Affected
Airplane Flight Operations Affected (Flight Crew Operations Manual and/or FAA Approved Airplane Flight Manual)	No	Paragraph 1.K., Publications Affected
Kits/Parts Required	No	Paragraph 2.C.1., Kits/Parts
Operator Supplied Parts/Material	Yes	Paragraph 2.C.2., Parts and Materials Supplied by the Operator
Special Tooling Required	No	Paragraph 2.F., Special Tooling Necessary to do this Service Bulletin

ACTION (PRR 39800-018RS)

Do a detailed and High Frequency Eddy Current (HFEC) inspection for cracks in the skin at Stringer S-17, left and right, at STA 360 to STA 380 and at STA 888 to STA 907. The inspection area is a two inch band of skin, centered on the two rows of fasteners of S-17, STA 360 to STA 380 and STA 888 to STA 907, left and right sides. If any crack is found, accomplish the repair and post repair inspections as shown in this service bulletin. If no crack is found, reinspect at intervals shown in the service bulletin or accomplish terminating action as shown in this service bulletin.

EFFECTIVITY

737-600/-700/-800 Airplane(s). Refer to Paragraph 1.A.1., Airplanes, for the list of affected airplane(s).

COMPLIANCE

The Federal Aviation Administration (FAA) will possibly release an Airworthiness Directive related to this service bulletin. The Airworthiness Directive will make the compliance tasks and times given in Compliance Tables 3 through 6 of this service bulletin mandatory.

Refer to Paragraph 1.E., Compliance.

INDUSTRY SUPPORT INFORMATION

Boeing warranty remedies are available for 737 airplanes in warranty as of March 27, 1998. For inspection labor task hour reimbursement for airplanes in warranty as of that date, send a warranty claim to BCA Contracts - Warranty. If the condition described in this service bulletin is found during the inspection for airplanes in warranty as of that date and additional task hours are required, send a warranty claim to BCA Contracts - Warranty. Boeing warranty remedies are not available for the supplemental Damage Tolerance Inspections associated with Figure 7.

MANPOWER

Refer to Paragraph 1.G., Manpower.

MATERIAL INFORMATION

Operator Supplied Parts/Materials.

Refer to Paragraph 2.A., Material - Price and Availability.

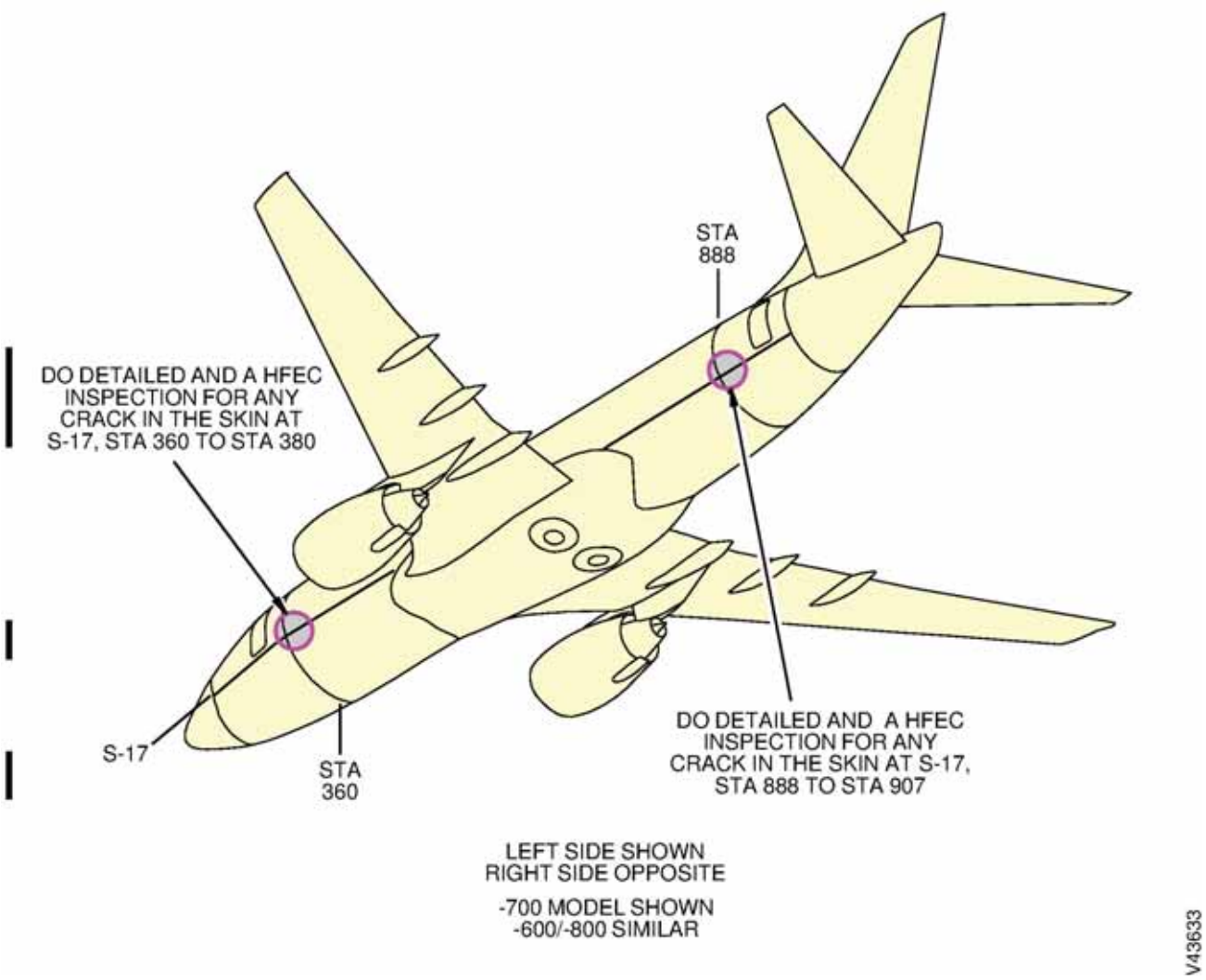

BLANK PAGE

ALERT

Number: **737-53A1217**
Original Issue: August 09, 2001
Revision 1: September 08, 2022
ATA System: 5300

SUBJECT: FUSELAGE - Section 43 and Section 47 - Stringer 17 Skin Cracks at STA 360-380 and STA 888-907

THIS DOCUMENT IS SENT TO THE OPERATORS OF RECORD OF THE AIRPLANES SHOWN IN PARAGRAPH 1.A., EFFECTIVITY. IF AN AIRPLANE HAS BEEN LEASED OR SOLD, SEND THIS DOCUMENT TO THE NEW OPERATOR. IF APPLICABLE SPARES HAVE BEEN SOLD, SEND THIS DOCUMENT TO THE NEW OWNER.

1. PLANNING INFORMATION

A. Effectivity

1. Airplanes
Refer to Service Bulletin Index D6-19567 Part 3 for Airplane Variable Number, Line Number, and Serial Number data.

This bulletin is applicable to 737-600, 737-700, 737-800 Airplane(s), line number(s) 1-269 in 3 Group(s). Where the effectivity is presented with hyphens between line numbers, the airplane applicability means "through" and "inclusive", e.g. line numbers 1-9 means line numbers 1 through 9 inclusive.

Airplanes might be in more than one configuration and must do the actions for each applicable configuration.

GROUP	CONFIGURATION	DESCRIPTION
1	-	737-700/-800 airplanes.
	1	Airplanes that have not accomplished this service bulletin.
	2	Airplanes with any inspection zone that have not done the terminating action.
	3	Airplanes with any inspection zone that have installed a repair specified in this service bulletin.
	4	Airplanes with any inspection zone that have done the terminating action specified in Part 6 of this service bulletin.

GROUP	CONFIGURATION	DESCRIPTION
2	-	737-600/-700/-800 airplanes.
	1	Airplanes that have not accomplished this service bulletin.
	2	Airplanes with any inspection zone that have not done the terminating action.
	3	Airplanes with any inspection zone that have installed a repair specified in this service bulletin.
	4	Airplanes with any inspection zone that have done the terminating action specified in Part 8 of this service bulletin.
3	-	737-600 airplanes.
	1	Airplanes that have not accomplished this service bulletin.
	2	Airplanes with any inspection zone that have not done the terninationg action.
	3	Airplanes with any inspection zone that have installed a repair specified in this service bulletin.
	4	Airplanes with any inspection zone that have done the terminating action specified in Part 6 of this service bulletin.

Airplane Models:

737-600, 737-700, 737-800

Variable Number	Group
YA001 - YA030	1
YA031	2
YA201 - YA206	1
YA231 - YA242	1
YA251 - YA254	1
YA271 - YA272	1
YA291	1
YA301 - YA302	1
YA311 - YA313	1
YA321	1
YA501 - YA521	1

Variable Number	Group
YA522	2
YA523	1
YA541 - YA544	1
YA545 - YA546	2
YA571 - YA577	1
YA601 - YA606	1
YA701 - YA704	1
YA721 - YA722	1
YA731	1
YA751 - YA754	1
YA755	2

Variable Number	Group
YA811 - YA812	1
YA831	2
YC001 - YC009	1
YC010 - YC011	2
YC051 - YC058	1
YC071 - YC074	1
YC101 - YC103	1
YC111 - YC112	1
YC121	1
YC126	1
YC301 - YC302	1

Variable Number	Group
YC321 - YC337	1
YC338	2
YC381 - YC382	1
YC391	1
YC401 - YC406	1
YC407	2
YC471	1
YC501 - YC507	1
YC508 - YC510	2
YC571 - YC578	1
YC591	1

Variable Number	Group
YC592	2
YC601 - YC606	1
YC607	2
YC701 - YC706	1
YC731 - YC732	1
YC751 - YC752	1
YC761 - YC763	2
YC781	1
YC782	2
YC801 - YC805	1
YC806 - YC809	2

Variable Number	Group
YE001 - YE010	3
YE011	2
YE101 - YE104	3
YE105 - YE106	2
YE151	2
YG001	1
YG002	2
YG003 - YG011	1
YG013 - YG018	1
YG020 - YG022	2
-	-

2. Spares Affected
   None.

B. Concurrent Requirements

None.

C. Reason

Accomplishment of the inspection shown in this service bulletin will make sure that skin cracks at the double row of fasteners centered on Stringers S-17L and S-17R, at station (STA) 360 to STA 380 and at STA 888 to STA 907 are found and repaired. If this service bulletin is not done, continued operation with an undetected crack could result in possible rapid decompression and loss of structural integrity.

In production, a structural preload was created in the body skin during the installation of S-17. Analysis by Boeing shows that this preload, combined with pressure cycles, can cause cracks in the skin prior to reaching the Design Service Objective (DSO).

Engineering evaluation has shown that airplanes with this condition meet all FAA and JAA static strength requirements and are structurally satisfactory. Analysis indicates that the DSO may not be reached unless the preload condition is repaired.

Several airplanes have had inspections and/or repairs accomplished at STA 360 to STA 380. However, some of these airplanes still require an inspection to be accomplished at STA 888 to STA 907.

Accomplishment of the terminating action shown in this service bulletin will ensure that cracks do not initiate. Cracks will result in unscheduled time out of service to accomplish repairs.

For 737-600, 737-700, and 737-800 airplanes after Line Number 269 the sequence of assembly was changed to eliminate the preload.

Service bulletin 737-53A1217 R01 supersedes the damage tolerance inspection data given in service bulletin 737-00-1007 for service bulletin 737-53-1217 R0 Figures 6, 8 and 9. Service bulletin 737-53A1217 R01 also adds post repair inspections for existing Figure 7.

This Revision 1 is sent to move airplanes from Group 1 to new Group 3, add new internal and external post repair inspections of the repair doubler, add new inspections for skin repair and add new repair figures for Group 3 airplanes.

D. Description

Do a Detailed and a High Frequency Eddy Current (HFEC) inspection for cracks in the skin at Stringer S-17, left and right, at STA 360 to STA 380 and at STA 888 to STA 907. The inspection area is a two inch band of skin, centered on the two rows of fasteners of S-17, STA 360 to STA 380 and STA 888 to STA 907, left and right sides. If any crack is found, accomplish the repair and post repair inspections as shown in this service bulletin. If no crack is found, reinspect at intervals shown in the service bulletin or accomplish terminating action as shown in this service bulletin.

Effects of this Revision on airplanes on which the original issue was previously done:

Group	Condition	Action
Group 1-3, Configuration 1	Airplanes that have not accomplished this service bulletin.	Do the initial High Frequency Eddy Current (HFEC) inspections at all locations.
Group 1-3, Configuration 2	Airplanes that have not done the terminating action.	Repeat the HFEC inspections at all unrepaired locations.
Group 1-3, Configuration 3	Airplanes that have installed a repair.	Do the post repair inspections at each of the repair locations.
Group 1-3, Configuration 4	Airplanes that have done the terminating action.	No further action required at that location.

Airplane variable numbers YE001-YE010 and YE101-YE104 were moved from Group 1 to new Group 3 of this service bulletin effectivity.

The work in this service bulletin is done in the maintenance zone(s) given below.

Group 1:

Affected Maintenance Zones	
Model	**Zone**
737-700, 737-800	121, 122, 141, 142, 231, 232, 241, 242

Group 2:

Affected Maintenance Zones	
Model	**Zone**
737-600, 737-700, 737-800	121, 122, 141, 142, 231, 232, 241, 242

Group 3:

Affected Maintenance Zones	
Model	**Zone**
737-600	121, 122, 141, 142, 231, 232, 241, 242

E. Compliance

The Federal Aviation Administration (FAA) will possibly release an Airworthiness Directive related to this service bulletin. The Airworthiness Directive will make the compliance tasks and times given in Compliance Tables 3 through 6 of this service bulletin mandatory.

For airplanes which have incorporated Boeing Business Jet (BBJ) Lower Cabin Altitude Supplemental Type Certificate (STC) ST01697SE (6500 feet maximum cabin altitude in lieu of 8000 feet) as referenced in Boeing SB 737-21-1149, the flight cycle related compliance times are different from those specified in this service bulletin. All initial compliance times (thresholds) specified in flight cycles must be reduced to half of those specified in this service bulletin. All repeat interval compliance times specified in flight cycles must be reduced to one-quarter of those specified in this service bulletin.

Accomplish the required action(s), based on the applicable condition(s) in Table(s) 1 through 7, in accordance with Paragraph 3. Accomplishment Instructions.

When more than one OPTION is given for a CONDITION, do only one of the OPTION numbers. When more than one ACTION is given for a CONDITION or an OPTION, do all of the ACTION numbers for that CONDITION or OPTION.

Logic diagrams showing compliance tasks and compliance times is included as an aid in APPENDIX A, APPENDIX B, APPENDIX C, APPENDIX D, APPENDIX E, and APPENDIX F.

Affected Inspection and Repair ZONE Table

ZONE 1	STA 360-380 Centered on Stringer 17L
ZONE 2	STA 360-380 Centered on Stringer 17R
ZONE 3	STA 888-907 Centered on Stringer 17L
ZONE 4	STA 888-907 Centered on Stringer 17R

PART TITLE:

PART	TITLE
PART 1	HIGH FREQUENCY EDDY CURRENT (HFEC) INSPECTION OF THE SKIN AT ZONE 1, ZONE 2, ZONE 3 AND ZONE 4.
PART 2	SKIN REPAIR AT ZONE 1.
PART 3	SKIN REPAIR AT ZONE 2.
PART 4	SKIN REPAIR AT ZONE 3.
PART 5	SKIN REPAIR AT ZONE 4.

PART TITLE:

PART	TITLE
PART 6	TERMINATING ACTION AT ZONE 1, ZONE 2, ZONE 3 AND ZONE 4.
PART 7	HIGH FREQUENCY EDDY CURRENT (HFEC) INSPECTION OF THE SKIN AT ZONE 3 AND ZONE 4.
PART 8	TERMINATING ACTION AT ZONE 3 AND ZONE 4.
PART 9	EXTERNAL DETAILED INSPECTION AND LOW FREQUENCY EDDY CURRENT (LFEC) INSPECTION OF THE SKIN REPAIR AT ZONE 1.
PART 10	INTERNAL DETAILED AND MEDIUM FREQUENCY EDDY CURRENT (MFEC) INSPECTION OF THE SKIN REPAIR AT ZONE 1.
PART 11	EXTERNAL DETAILED INSPECTION AND LOW FREQUENCY EDDY CURRENT (LFEC) INSPECTION OF THE SKIN REPAIR AT ZONE 2.
PART 12	INTERNAL DETAILED AND MEDIUM FREQUENCY EDDY CURRENT (MFEC) INSPECTION OF THE SKIN REPAIR AT ZONE 2.
PART 13	EXTERNAL DETAILED INSPECTION AND LOW FREQUENCY EDDY CURRENT (LFEC) INSPECTION OF THE SKIN REPAIR AT ZONE 3.
PART 14	INTERNAL DETAILED AND MEDIUM FREQUENCY EDDY CURRENT (MFEC) INSPECTION OF THE SKIN REPAIR AT ZONE 3.
PART 15	EXTERNAL DETAILED INSPECTION AND LOW FREQUENCY EDDY CURRENT (LFEC) INSPECTION OF THE SKIN REPAIR AT ZONE 4.
PART 16	INTERNAL DETAILED AND MEDIUM FREQUENCY EDDY CURRENT (MFEC) INSPECTION OF THE SKIN REPAIR AT ZONE 4.

Group 1, Configuration 1-2; Group 3, Configuration 1-2:
Table 1: High Frequency Eddy Current (HFEC) Inspection Of The Skin At ZONE 1, ZONE 2, ZONE 3 AND ZONE 4

Condition	Action	Compliance Time	Repeat Interval (Not to Exceed)
All airplanes.	Do PART 1 for any crack. (a)	Before 36,000 total flight cycles.	-
CONDITION 1: ANY CRACK FOUND WITHIN ZONE 1.	Do PART 2 skin repair at zone 1.(b)	Before further flight.	-

Group 1, Configuration 1-2; Group 3, Configuration 1-2:
Table 1: High Frequency Eddy Current (HFEC) Inspection Of The Skin At ZONE 1, ZONE 2, ZONE 3 AND ZONE 4

Condition	Action	Compliance Time	Repeat Interval (Not to Exceed)
CONDITION 2: ANY CRACK FOUND WITHIN ZONE 2.	OPTION 1: Do PART 3 skin repair at zone 2. (c)(e)	Before further flight.	-
	OPTION 2: Contact The Boeing Company for repair instructions and do the repair. (d)	Before further flight.	-
CONDITION 3: ANY CRACK FOUND WITHIN ZONE 3.	Do PART 4 skin repair at zone 3. (f)	Before further flight.	-
CONDITION 4: ANY CRACK FOUND WITHIN ZONE 4.	Do PART 5 skin repair at zone 4.(g)	Before further flight.	-
CONDITION 5: NO CRACK FOUND on airplanes that have not converted into 737-800BCF under project number TS14-0042 and have not incorporated Boeing drawing 800A0003 specified in the Type Certificate Data Sheet A16WE.	OPTION 1: Repeat PART 1 for any crack at any unrepaired zone. (c)	-	6,000 flight cycles. (h)
	OPTION 2: Do PART 6 at any unrepaired zone. (c)(h)	Before further flight.	-
CONDITION 6: NO CRACK FOUND on airplanes that have converted into 737-800BCF under project number TS14-0042 that have incorporated Boeing drawing 800A0003 specified in the Type Certificate Data Sheet A16WE.	OPTION 1: Repeat PART 1 for any crack at any unrepaired zone. (a)(d)	-	6,000 flight cycles. (h)
	OPTION 2: (Action 1) Repeat PART 1 for any crack at unrepaired zone 2. (d)	-	6,000 flight cycles. (h)
	OPTION 2: (Action 2) Do PART 6 at unrepaired zone 3 and unrepaired zone 4. (d)(h)	Before further flight	-
(a) It is not required to do the High Frequency Eddy Current Skin Inspections for Zone 1 for airplanes converted into 737-800BCF under project number TS14-0042 that have incorporated Boeing drawing 800A0003 specified in the Type Certificate Data Sheet A16WE.			
(b) Refer to Compliance Table 3 for post repair inspections.			
(c) Only applicable to airplanes that have not converted into 737-800BCF under project number TS14-0042 and have not incorporated Boeing drawing 800A0003 specified in the Type Certificate Data Sheet A16WE.			

Group 1, Configuration 1-2; Group 3, Configuration 1-2:
Table 1: High Frequency Eddy Current (HFEC) Inspection Of The Skin At ZONE 1, ZONE 2, ZONE 3 AND ZONE 4

Condition	Action	Compliance Time	Repeat Interval (Not to Exceed)
(d) Only applicable to airplanes that have converted into 737-800BCF under project number TS14-0042 that have incorporated Boeing drawing 800A0003 specified in the Type Certificate Data Sheet A16WE.			
(e) Refer to Compliance Table 4 for post repair inspections.			
(f) Refer to Compliance Table 5 for post repair inspections.			
(g) Refer to Compliance Table 6 for post repair inspections.			
(h) Accomplishment of PART 6: TERMINATING ACTION AT ZONE 1, ZONE 2, ZONE 3 AND ZONE 4 is terminating action to the repeat inspections at that zone location.			

Group 2, Configuration 1-2:
Table 2: High Frequency Eddy Current (HFEC) Inspection Of The Skin At ZONE 3 AND ZONE 4

Condition	Action	Compliance Time	Repeat Interval (Not to Exceed)
All airplanes.	Do PART 7 for any crack.	Before 36,000 total flight cycles.	-
CONDITION 7: ANY CRACK FOUND WITHIN ZONE 3.	Do PART 4 skin repair at zone 3. (a)	Before further flight.	-
CONDITION 8: ANY CRACK FOUND WITHIN ZONE 4.	Do PART 5 skin repair at zone 4.(b)	Before further flight.	-
CONDITION 9: NO CRACK FOUND	OPTION 1: Repeat PART 7 for any crack at any unrepaired zone.	-	6,000 flight cycles. (c)
	OPTION 2: Do PART 8 at any unrepaired zone. (c)	Before further flight.	-
(a) Refer to Compliance Table 5 for post repair instructions.			
(b) Refer to Compliance Table 6 for post repair instructions.			
(c) Accomplishment of PART 8: TERMINATING ACTION AT ZONE 3 AND ZONE 4 is terminating action to the repeat inspections at that zone location.			

Group 1, 3, Configuration 3:
Table 3: Post Repair Inspections At ZONE 1

Condition	Action	Compliance Time (Whichever Occurs Later)		Repeat Interval (Not to Exceed)
Airplanes that have accomplished a repair in accordance with SB 737-53-1217 Original Issue.	Contact The Boeing Company for alternative inspection and corrective action instructions and do the alternative inspections and applicable corrective actions.	Before 50,000 total flight cycles.	Within 4,000 flight cycles after repair installation.	-
Airplanes that have not accomplished a repair in accordance with SB 737-53-1217 Original Issue.	ACTION 1: Do PART 9 for any crack.	Before 50,000 total flight cycles.	Within 4,000 flight cycles after repair installation.	-
	ACTION 2: Do PART 10 for any crack.	Before 50,000 total flight cycles.	Within 36,000 flight cycles after repair installation.	-
CONDITION 10: ANY CRACK FOUND.	Contact The Boeing Company for repair instructions and do the repair.	Before further flight.		-
CONDITION 11: NO CRACK FOUND.	CONDITION 11 (ACTION 1): Repeat PART 9 for any crack.	-		4,000 flight cycles.
	CONDITION 11 (ACTION 2): Repeat PART 10 for any crack.	-		36,000 flight cycles.

Group 1, 3, Configuration 3:
Table 4: Post Repair Inspections At ZONE 2

Condition	Action	Compliance Time (Whichever Occurs Later)		Repeat Interval (Not to Exceed)
Airplanes that have accomplished a repair in accordance with SB 737-53-1217 Original Issue.	Contact The Boeing Company for alternative inspection and corrective action instructions and do the alternative inspections and applicable corrective actions.	Before 50,000 total flight cycles.	Within 4,000 flight cycles after repair installation.	-
Airplanes that have not accomplished a repair in accordance with SB 737-53-1217 Original Issue.	ACTION 1: Do PART 11 for any crack.	Before 50,000 total flight cycles.	Within 4,000 flight cycles after repair installation.	-
	ACTION 2: Do PART 12 for any crack.	Before 50,000 total flight cycles.	Within 36,000 flight cycles after repair installation.	-

Group 1, 3, Configuration 3:
Table 4: Post Repair Inspections At ZONE 2

Condition	Action	Compliance Time (Whichever Occurs Later)	Repeat Interval (Not to Exceed)
CONDITION 12: ANY CRACK FOUND.	Contact The Boeing Company for repair instructions and do the repair.	Before further flight.	-
CONDITION 13: NO CRACK FOUND.	CONDITION 13 (ACTION 1): Repeat PART 11 for any crack.	-	4,000 flight cycles.
	CONDITION 13 (ACTION 2): Repeat PART 12 for any crack.	-	36,000 flight cycles.

Group 1-3, Configuration 3:
Table 5: Post Repair Inspections At ZONE 3

Condition	Action	Compliance Time (Whichever Occurs Later)		Repeat Interval (Not to Exceed)
Airplanes that have accomplished a repair in accordance with SB 737-53-1217 Original Issue.	Contact The Boeing Company for alternative inspection and corrective action instructions and do the alternative inspections and applicable corrective actions.	Before 50,000 total flight cycles.	Within 4,000 flight cycles after repair installation.	-
Airplanes that have not accomplished a repair in accordance with SB 737-53-1217 Original Issue.	ACTION 1: Do PART 13 for any crack.	Before 50,000 total flight cycles.	Within 4,000 flight cycles after repair installation.	-
	ACTION 2: Do PART 14 for any crack.	Before 50,000 total flight cycles.	Within 36,000 flight cycles after repair installation.	-
CONDITION 14: ANY CRACK FOUND.	Contact The Boeing Company for repair instructions and do the repair.	Before further flight.		-
CONDITION 15: NO CRACK FOUND.	CONDITION 15 (ACTION 1): Repeat PART 13 for any crack.	-		4,000 flight cycles.
	CONDITION 15 (ACTION 2): Repeat PART 14 for any crack.	-		36,000 flight cycles.

Group 1-3, Configuration 3:
Table 6: Post Repair Inspections At ZONE 4

Condition	Action	Compliance Time (Whichever Occurs Later)		Repeat Interval (Not to Exceed)
Airplanes that have accomplished a repair in accordance with SB 737-53-1217 Original Issue.	Contact The Boeing Company for alternative inspection and corrective action instructions and do the alternative inspections and applicable corrective actions.	Before 50,000 total flight cycles.	Within 4,000 flight cycles after repair installation.	-
Airplanes that have not accomplished a repair in accordance with SB 737-53-1217 Original Issue.	ACTION 1: Do PART 15 for any crack.	Before 50,000 total flight cycles.	Within 4,000 flight cycles after repair installation.	-
	ACTION 2: Do PART 16 for any crack.	Before 50,000 total flight cycles.	Within 36,000 flight cycles after repair installation.	-
CONDITION 16: ANY CRACK FOUND.	Contact The Boeing Company for repair instructions and do the repair.	Before further flight.		-
CONDITION 17: NO CRACK FOUND.	CONDITION 17 (ACTION 1): Repeat PART 15 for any crack.	-		4,000 flight cycles.
	CONDITION 17 (ACTION 2): Repeat PART 16 for any crack.	-		36,000 flight cycles.

F. Approval

This service bulletin was examined by the Federal Aviation Administration (FAA). The changes specified in this service bulletin comply with the applicable regulations and are FAA approved, as well as European Union Aviation Safety Agency (EASA)/Joint Aviation Authorities (JAA) approved for all EASA/JAA approved airplanes listed in the service bulletin effectivity. This service bulletin and its approval were based on the airplane in its original Boeing delivery configuration or as modified by other approved Boeing changes.

This service bulletin is also approved for airplanes having FAA Aviation Partners Boeing (APB) Supplemental Type Certificate (STC) number ST00830SE installed (not including any areas affected by the split scimitar winglet configuration).

This service bulletin is also approved for airplanes converted into 737-800BCF under project number TS14-0042 that have incorporated Boeing drawing 800A0003 specified in the Type Certificate Data Sheet A16WE.

If an airplane has a non-Boeing modification or repair that affects a component or system also affected by this service bulletin, the operator is responsible for obtaining appropriate regulatory agency approval before incorporating this service bulletin.

G. Manpower

The table below shows an estimate of the task hours necessary to do this service bulletin for each airplane. This estimate is for direct labor only, done by an experienced crew. Adjust the estimate with operator task hour data if necessary. The estimate does not include lost time. These are some examples of lost time:

- Time to adjust to the workplace
- Time to schedule the work
- Time to inspect the work
- Time to cure the materials
- Time to make the parts
- Time to find the tools

Group 1, Configuration 1-2; Group 3, Configuration 1-2:
High Frequency Eddy Current (HFEC) Inspection of ZONE 1, ZONE 2, ZONE 3 AND ZONE 4

Task	Number of Persons	Task Hours	Elapsed Hours
FIGURE 2	2	4.00	2.00
FIGURE 3	2	4.00	2.00
TOTAL FOR EACH AIRPLANE		8.00	4.00

Group 1, Configuration 1-2; Group 3, Configuration 1-2:
Terminating Action for ZONE 1, ZONE 2, ZONE 3 AND ZONE 4

Task	Number of Persons	Task Hours	Elapsed Hours
Open Access	2	20.00	10.00
FIGURE 4	2	11.00	5.50
FIGURE 5	2	11.00	5.50
Close Access	2	24.00	12.00
TOTAL FOR EACH AIRPLANE		66.00	33.00

Group 2, Configuration 1-2:
High Frequency Eddy Current (HFEC) Inspection of ZONE 3 AND ZONE 4

Task	Number of Persons	Task Hours	Elapsed Hours
FIGURE 3	2	4.00	2.00
TOTAL FOR EACH AIRPLANE		4.00	2.00

Group 2, Configuration 1-2:
Terminating Action for ZONE 3 AND ZONE 4

Task	Number of Persons	Task Hours	Elapsed Hours
Open Access	2	20.00	10.00

Group 2, Configuration 1-2:
Terminating Action for ZONE 3 AND ZONE 4

Task	Number of Persons	Task Hours	Elapsed Hours
FIGURE 5	2	11.00	5.50
Close Access	2	24.00	12.00
TOTAL FOR EACH AIRPLANE		55.00	27.50

Group 1, Configuration 1-2:
Skin Repair for ZONE 1, ZONE 2, ZONE 3 AND ZONE 4

Task	Number of Persons	Task Hours	Elapsed Hours
Open Access	2	20.00	10.00
FIGURE 6	2	31.00	15.50
FIGURE 7	2	32.00	16.00
FIGURE 8	2	30.00	15.00
FIGURE 9	2	32.00	16.00
Close Access	2	24.00	12.00
TOTAL FOR EACH AIRPLANE		169.00	84.50

Group 3, Configuration 1-2:
Skin Repair for ZONE 1, ZONE 2, ZONE 3 AND ZONE 4

Task	Number of Persons	Task Hours	Elapsed Hours
Open Access	2	20.00	10.00
FIGURE 6	2	31.00	15.50
FIGURE 8	2	30.00	15.00
FIGURE 9	2	32.00	16.00
FIGURE 10	2	32.00	16.00
Close Access	2	24.00	12.00
TOTAL FOR EACH AIRPLANE		169.00	84.50

Group 2, Configuration 1-2:
Skin Repair for ZONE 3 AND ZONE 4

Task	Number of Persons	Task Hours	Elapsed Hours
Open Access	2	20.00	10.00
FIGURE 8	2	30.00	15.00
FIGURE 9	2	32.00	16.00

Group 2, Configuration 1-2:
Skin Repair for ZONE 3 AND ZONE 4

Task	Number of Persons	Task Hours	Elapsed Hours
Close Access	2	24.00	12.00
TOTAL FOR EACH AIRPLANE		106.00	53.00

Group 1, Configuration 3:
External Post Repair Inspections At ZONE 1 AND ZONE 2

Task	Number of Persons	Task Hours	Elapsed Hours
Open Access	2	20.00	10.00
FIGURE 11	2	6.00	3.00
FIGURE 13	2	6.00	3.00
Close Access	2	24.00	12.00
TOTAL FOR EACH AIRPLANE		56.00	28.00

Group 3, Configuration 3:
External Post Repair Inspections At ZONE 1 AND ZONE 2

Task	Number of Persons	Task Hours	Elapsed Hours
Open Access	2	20.00	10.00
FIGURE 11	2	6.00	3.00
FIGURE 14	2	6.00	3.00
Close Access	2	24.00	12.00
TOTAL FOR EACH AIRPLANE		56.00	28.00

Group 1, 3, Configuration 3:
Internal Post Repair Inspections At ZONE 1 AND ZONE 2

Task	Number of Persons	Task Hours	Elapsed Hours
Open Access	2	20.00	10.00
FIGURE 12	2	4.00	2.00
FIGURE 15	2	4.00	2.00
Close Access	2	24.00	12.00
TOTAL FOR EACH AIRPLANE		52.00	26.00

Group 1-3, Configuration 3:
External Post Repair Inspections At ZONE 3 AND ZONE 4

Task	Number of Persons	Task Hours	Elapsed Hours
Open Access	2	20.00	10.00
FIGURE 16	2	6.00	3.00
FIGURE 18	2	6.00	3.00
Close Access	2	24.00	12.00
TOTAL FOR EACH AIRPLANE		56.00	28.00

Group 1-3, Configuration 3:
Internal Post Repair Inspections At ZONE 3 AND ZONE 4

Task	Number of Persons	Task Hours	Elapsed Hours
Open Access	2	20.00	10.00
FIGURE 17	2	4.00	2.00
FIGURE 19	2	4.00	2.00
Close Access	2	24.00	12.00
TOTAL FOR EACH AIRPLANE		52.00	26.00

H. Weight and Balance Changes

The addition of tapered fillers to Stringer S-17 is not large enough to impact the weight and balance of the airplane. The information in the table below is for the addition of the doublers during the repair of cracked skin.

Group 1, 3:
Skin Repair at ZONE 1 and ZONE 2

Airplane	Change in Weight (Pounds)	Change in Moment (Pound-Inches)
737-600	+2.7	+920
737-700	+2.7	+770
737-800	+2.7	+460

Skin Repair at ZONE 3 and ZONE 4

Airplane	Change in Weight (Pounds)	Change in Moment (Pound-Inches)
737-600	+2.2	+2100
737-700	+2.2	+2200
737-800	+2.2	+2400

I. Electrical Load Data

Not changed.

J. References

1. Existing Data:

   a. Engineering Change Memo PRR 39800-018RS

   b. Boeing Service Bulletin 737-21-1149

   c. Boeing Service Related Problem (SRP) 737NG-SRP-53-0598

   d. Service Bulletin Index D6-19567

   e. Standard Overhaul Practices Manual (SOPM) 20-41-02, 20-43-03, 20-50-01, 20-50-19

   f. 737 Non-Destructive Testing (NDT) Manual Part 6, 51-00-00, Part 6, 53-30-00, Part 6, Subject 51-00-00

   g. 737-600/700/800/900 Aircraft Maintenance Manual (AMM) 25-21-46, 25-22-00, 25-27-15, 25-80-00, 53-21-00

   h. 737-600 Structural Repair Manual (SRM) 51-10-01, 51-10-02, 51-20-05, 51-20-13, 51-40-02, 51-40-08

   i. 737-700 Structural Repair Manual (SRM) 51-10-01, 51-10-02, 51-20-05, 51-20-13, 51-40-02, 51-40-08

   j. 737-800 Structural Repair Manual (SRM) 51-10-01, 51-10-02, 51-20-05, 51-20-13, 51-40-02, 51-40-08

   k. 737-800BCF Structural Repair Manual (SRM) 51-10-01, 51-10-02, 51-20-05, 51-20-13, 51-40-02, 51-40-08

   l. 737NG Fleet Team Digest (FTD) 53-19001

2. Data Supplied with this Service Bulletin:

   None.

3. Installation Drawings Used in the Preparation of this Service Bulletin:

Drawing Number	Title
143A3210	Skin Panel Instl. STA 360 to STA 540 Stringer 14L to Stringer 24L
147A0010	Panel Instl - Entry. Section 47
141A8240	CHORD
140A9101	ANGLE SPLICE

The table above lists applicable drawings used to prepare this service bulletin. The drawings are not necessary to make the specified changes, and are not supplied with this service bulletin. The drawings may not be applicable to all airplane configurations or operators.

K. Publications Affected

1. Publications:

None.

2. Damage Tolerance Based Structural Inspections:

Boeing has evaluated the repairs or changes in this service bulletin for effects on Fatigue Critical Structure (FCS) and for changes to Damage Tolerance Inspections (DTI) required in the Maintenance Program. This service bulletin affects FCS. DTI requirements for the structure affected are contained in Paragraph 1.E., Compliance of this service bulletin.

L. Interchangeability and Intermixability of Parts

Accomplishment of this service bulletin does not affect interchangeability or intermixability of parts.

M. Software Accomplishment Summary

Not affected.

BLANK PAGE

2. MATERIAL INFORMATION

A. Material - Price and Availability

None.

B. Industry Support Information

Boeing warranty remedies are available for 737 airplanes in warranty as of March 27, 1998. For inspection labor task hour reimbursement for airplanes in warranty as of that date, send a warranty claim to BCA Contracts - Warranty. If the condition described in this service bulletin is found during the inspection for airplanes in warranty as of that date and additional task hours are required, send a warranty claim to BCA Contracts - Warranty. Boeing warranty remedies are not available for the supplemental Damage Tolerance Inspections associated with Figure 7.

C. Parts Necessary for Each Airplane

1. Kits/Parts

None.

2. Parts and Materials Supplied by the Operator

The following parts or materials are necessary to do the change in this service bulletin. Parts and materials in the manuals given in Paragraph 1.J., References, can also be necessary. Examine operator part and material supply to make sure all necessary parts and materials are available.

Part Number / Specification	QTY	Name	Notes
BACB30NW6K( )Y	246	BOLT	(a)(e)
BACB30NX6K()Y	24	BOLT	(a)(e)
BACC30R6	272	COLLAR	(a)(e)
BACR15ET7D	66	RIVET	(a)(e)
BACR15GF6D	356	RIVET	(a)(e)
2024-T3	-	CLAD SHEET	(e)
BMS 5-95	5 Ounces	SEALANT	(b)(e)
BMS 10-11, TYPE I	5 Ounces	PRIMER	(b)(c)(e)
TYPE II, CLASS A	5 Ounces	CHEMICAL CONVERSION COATING	(b)(d)(e)
BMS 3-23, TYPE II, CLASS 2	5 Ounces	CORROSION INHIBITING COMPOUND	(b)(e)
(a) Refer to 737 Structural Repair Manual Chapter 51 for alternate fasteners.			
(b) Refer to the Qualified Products List at the end of the Boeing Material Specification (BMS) for supplier data.			

Part Number / Specification	QTY	Name	Notes
(c) Some primers contain Strontium Chromate and will not be available in the European Union after January 2019 without an authorization. EU operators are encouraged to ensure their suppliers are authorized to provide the material after the sunset date and that downstream users comply with the risk mitigation measures and operational conditions.			
(d) Some conversion coatings contain Chromium trioxide/Chromic acid and will not be available in the European Union after September 2017 without an authorization. EU operators are encouraged to ensure their suppliers are authorized to provide the material after the sunset date and that downstream users comply with the risk mitigation measures and operational conditions.			
(e) Boeing Distribution Services Inc (cage code: 2N935) 3760 W. 108th Street, Miami, FL 33018 USA Website: https://www.boeingdistribution.com Telephone: +1.305.925.2600 Fax: +1.305.507.7191 AOG: +1.305.471.8888 Email: Your BDSI customer representative or AOGdesk@Boeingdistribution.com.			

3. Parts Modified and Reidentified

   None.

4. Parts Removed and Not Replaced

   None.

D. Parts Necessary to Change Spares

None.

E. Special Tooling - Price and Availability

None.

F. Special Tooling Necessary to do this Service Bulletin

No special tools or equipment are necessary to do the change in this service bulletin. But, maintenance and overhaul tools in the manuals given in Paragraph 1.J., References, can be necessary. Examine operator tool supply to make sure all necessary tools are available.

3. ACCOMPLISHMENT INSTRUCTIONS

A. GENERAL INFORMATION

CAUTION	KEEP THE WORK AREA, WIRES AND ELECTRICAL BUNDLES CLEAN OF METAL PARTICLES OR CONTAMINATION WHEN YOU USE TOOLS. UNWANTED MATERIAL, METAL PARTICLES OR CONTAMINATION CAUGHT IN WIRE BUNDLES CAN CAUSE DAMAGE TO THE BUNDLES. DAMAGED WIRE BUNDLES CAN CAUSE SPARKS OR OTHER ELECTRICAL DAMAGE.

NOTE:

1. Manual titles are referred to by acronyms. Refer to Paragraph 1.J., References, for definition of the acronyms.

2. Obey all of the warnings and cautions given in the specified manual sections.

3. Unless shown differently, these dimensions and tolerances are used:

   – Linear dimensions are in inches
   – Tolerance on linear dimensions, other than rivet and bolt edge margins, is plus or minus 0.03 inch
   – Tolerance on rivet and bolt edge margin is plus or minus 0.05 inch
   – Angular tolerance is plus or minus 2 degrees
   – Hole dimensions for standard solid rivets and fasteners are in Structural Repair Manual (SRM) Chapter 51
   – Torque Values:
     — Values for structural fasteners are given in 737 Structural Repair Manual, Chapter 51.
     — Non-standard torque values for maintenance tasks are included in the applicable installation step.

4. Use the approved fastener, process and material substitutions in accordance with SRM Chapter 51.

5. If the length of any fastener specified in this service bulletin does not meet installation standards given in SRM Chapter 51, then a fastener of the same specification, or an approved substitute, with a length which meets the installation standards given in SRM Chapter 51 may be used. In addition, washers may be installed for fastener grip length in accordance with SRM Chapter 51. Refer to SOPM 20-50-01 for alternate full threaded fasteners (screws) needed for installation in this service bulletin.

6. A Detailed Inspection is defined as: An intensive examination of a specific item, installation, or assembly to detect damage, failure, or irregularity. This could include tactile assessment in which a component or assembly can be checked for tightness/security. Available lighting is normally supplemented with a direct source of good lighting at an intensity deemed appropriate. Inspection aids such as mirrors, magnifying lenses, etc. may be necessary. Surface cleaning and elaborate procedures may be required.

7. These work instructions refer to procedures included in other Boeing documents. When the words "refer to" are used and the operator has an accepted alternative procedure, the accepted alternative procedure can be used. When the words "in accordance with" are included in the instruction, the procedure in the Boeing document must be used.

8. Refer to APPENDIX A, APPENDIX B, APPENDIX C, APPENDIX D, APPENDIX E, and APPENDIX F for logic diagram(s). Logic diagrams are provided as an aid only. Information contained in Paragraph 1.E., Compliance is the primary source for compliance times. Information in Paragraph 3.B., Work Instructions is the primary source for tasks required for compliance.

9. The instructions in Paragraph 3.B., Work Instructions and the figures can include operation of tools or test equipment. Boeing Engineering Tool Drawings, the Illustrated Tool and Equipment Manual, and the Special Tool and Ground Handling Drawing Index contain data on versions of the tools or test equipment that you can use. It is permitted to use replaced tools. It is not permitted to use superseded tools.

10. If it is necessary to remove more parts for access, you can remove those parts. If you can get access without removing identified parts, it is not necessary to remove all of the identified parts. Jacking and shoring limitations must be observed.

11. Where the work instructions include installation of a kept part, a new or serviceable part with the same part number can be installed as an alternative to the kept part.

12. If shading is used, shaded areas in Figures are to separate the non-critical and non-authoritative information from the critical and authoritative information.

13. Use of colors in Figures is based on guidance from the ATA e-Business Program (ATA) iSpec 2200.

14. When more than one OPTION is given for a CONDITION, do only one of the OPTION numbers. When more than one ACTION is given for a CONDITION or an OPTION, do all of the ACTION numbers for that CONDITION or OPTION.

15. The compliance times for the actions in Paragraph 3.B., WORK INSTRUCTIONS are in Paragraph 1.E., Compliance.

16. Some steps in the Work Instructions are labeled as Required for Compliance (RC). If this service bulletin is mandated by an Airworthiness Directive (AD), then the steps labeled as RC, including sub-steps under an RC step and any figures identified in an RC step, must be done to comply with the AD. If a step or sub-step is labeled "RC Exempt," then the RC requirement is removed from that step or sub-step. An Alternative Method of Compliance (AMOC) is required for any deviations to RC steps, including sub-steps and identified figures. Steps not labeled as RC may be deviated from using accepted methods in accordance with the operator's maintenance or inspection program without obtaining approval of an AMOC. This is provided that the RC steps, including sub-steps and identified figures, can still be done as specified, and the airplane can be put back in an airworthy condition.

B. WORK INSTRUCTIONS

1. **Group 1, Configuration 1-2; Group 3, Configuration 1-2:**
High Frequency Eddy Current (HFEC) Inspection of the skin at ZONE 1, ZONE 2, ZONE 3 AND ZONE 4.

a. Do PART 1: HIGH FREQUENCY EDDY CURRENT (HFEC) INSPECTION OF THE SKIN AT ZONE 1, ZONE 2, ZONE 3 AND ZONE 4 for any crack.

NOTE: It is not required to do the HFEC Skin Inspections for Zone 1 for airplanes converted into 737-800BCF under project number TS14-0042 that have incorporated Boeing drawing 800A0003 specified in the Type Certificate Data Sheet A16WE.

(1) CONDITION 1: ANY CRACK FOUND WITHIN ZONE 1.

(a) Do PART 17: GET ACCESS.

(b) Do PART 2: SKIN REPAIR AT ZONE 1.

NOTE: Refer to PART 9 and PART 10 for post repair inspections.

(c) Do PART 18: CLOSE ACCESS.

(2) CONDITION 2: ANY CRACK FOUND WITHIN ZONE 2.

(a) OPTION 1:

NOTE: OPTION 1 is only applicable to airplanes that have not converted into 737-800BCF under project number TS14-0042 and have not incorporated Boeing drawing 800A0003 specified in the Type Certificate Data Sheet A16WE.

1) Do PART 17: GET ACCESS.

2) Do PART 3: SKIN REPAIR AT ZONE 2.

NOTE: Refer to PART 11 and PART 12 for post repair inspections.

3) Do PART 18: CLOSE ACCESS.

(b) OPTION 2:

NOTE: OPTION 2 is only applicable to airplanes that have converted into 737-800BCF under project number TS14-0042 that have incorporated Boeing drawing 800A0003 specified in the Type Certificate Data Sheet A16WE.

1) Contact The Boeing Company for repair instructions and do the repair.

(3) CONDITION 3: ANY CRACK FOUND WITHIN ZONE 3.

(a) Do PART 17: GET ACCESS.

(b) Do PART 4: SKIN REPAIR AT ZONE 3.

NOTE: Refer to PART 13 and PART 14 for post repair inspections.

(c) Do PART 18: CLOSE ACCESS.

(4) CONDITION 4: ANY CRACK FOUND WITHIN ZONE 4.

(a) Do PART 17: GET ACCESS.

(b) Do PART 5: SKIN REPAIR AT ZONE 4.

NOTE: Refer to PART 15 and PART 16 for post repair inspections.

(c) Do PART 18: CLOSE ACCESS.

(5) CONDITION 5: NO CRACK FOUND on airplanes that have not converted into 737-800BCF under project number TS14-0042 and have not incorporated Boeing drawing 800A0003 specified in the Type Certificate Data Sheet A16WE.

(a) OPTION 1:

NOTE: OPTION 1 is only applicable to airplanes that have not converted into 737-800BCF under project number TS14-0042 and have not incorporated Boeing drawing 800A0003 specified in the Type Certificate Data Sheet A16WE.

1) Repeat PART 1: HIGH FREQUENCY EDDY CURRENT (HFEC) INSPECTION OF THE SKIN AT ZONE 1, ZONE 2, ZONE 3 AND ZONE 4 for any crack at any unrepaired zone.

NOTE: Accomplishment of PART 6: TERMINATING ACTION AT ZONE 1, ZONE 2, ZONE 3 AND ZONE 4 is terminating action to the repeat inspections at that zone location.

(b) OPTION 2:

NOTE: OPTION 2 is only applicable to airplanes that have not converted into 737-800BCF under project number TS14-0042 and have not incorporated Boeing drawing 800A0003 specified in the Type Certificate Data Sheet A16WE.

1) Do PART 6: TERMINATING ACTION AT ZONE 1, ZONE 2, ZONE 3 AND ZONE 4 at any unrepaired zone.

NOTE: Accomplishment of PART 6: TERMINATING ACTION AT ZONE 1, ZONE 2, ZONE 3 AND ZONE 4 is terminating action to the repeat inspections at that zone location.

(6) CONDITION 6: NO CRACK FOUND on airplanes that have converted into 737-800BCF under project number TS14-0042 that have incorporated Boeing drawing 800A0003 specified in the Type Certificate Data Sheet A16WE.

(a) OPTION 1:

NOTE: OPTION 1 is only applicable to airplanes that have converted into 737-800BCF under project number TS14-0042 and have incorporated Boeing drawing 800A0003 specified in the Type Certificate Data Sheet A16WE.

1) Repeat PART 1: HIGH FREQUENCY EDDY CURRENT (HFEC) INSPECTION OF THE SKIN AT ZONE 1, ZONE 2, ZONE 3 AND ZONE 4 for any crack at any unrepaired zone.

NOTE: It is not required to do the High Frequency Eddy Current Skin Inspections for Zone 1 for airplanes converted into 737-800BCF under project number TS14-0042 that have incorporated Boeing drawing 800A0003 specified in the Type Certificate Data Sheet A16WE.

NOTE: Accomplishment of PART 6: TERMINATING ACTION AT ZONE 1, ZONE 2, ZONE 3 AND ZONE 4 is terminating action to the repeat inspections at that zone location.

(b) OPTION 2:

NOTE: OPTION 2 is only applicable to airplanes that have converted into 737-800BCF under project number TS14-0042 and have incorporated Boeing drawing 800A0003 specified in the Type Certificate Data Sheet A16WE.

1) OPTION 2 (ACTION 1): Repeat PART1: HIGH FREQUENCY EDDY CURRENT (HFEC) INSPECTION OF THE SKIN AT ZONE 1, ZONE 2, ZONE 3 AND ZONE 4 for any crack at unrepaired zone 2.

NOTE: Accomplishment of PART 6: TERMINATING ACTION AT ZONE 1, ZONE 2, ZONE 3 AND ZONE 4 is terminating action to the repeat inspections at that zone location.

2) OPTION 2 (ACTION 2): Do PART 6: TERMINATING ACTION AT ZONE 1, ZONE 2, ZONE 3 AND ZONE 4 at any of ZONE 3 and ZONE 4 at unrepaired ZONE 3 and unrepaired ZONE 4.

NOTE: Accomplishment of PART 6: TERMINATING ACTION AT ZONE 1, ZONE 2, ZONE 3 AND ZONE 4 is terminating action to the repeat inspections at that zone location.

2. **Group 2, Configuration 1-2:**
High Frequency Eddy Current (HFEC) Inspection of the skin at ZONE 3 and ZONE 4.

a. Do PART 7: HIGH FREQUENCY EDDY CURRENT (HFEC) INSPECTION OF THE SKIN AT ZONE 3 AND ZONE 4 for any crack.

(1) CONDITION 7: ANY CRACK FOUND WITHIN ZONE 3.

(a) Do PART 17: GET ACCESS.

(b) Do PART 4: SKIN REPAIR AT ZONE 3.

NOTE: Refer to PART 13 and PART 14 for post repair inspections.

(c) Do PART 18: CLOSE ACCESS.

(2) CONDITION 8: ANY CRACK FOUND WITHIN ZONE 4.

(a) Do PART 17: GET ACCESS.

(b) Do PART 5: SKIN REPAIR AT ZONE 4.

NOTE: Refer to PART 15 and PART 16 for post repair inspections.

(c) Do PART 18: CLOSE ACCESS.

(3) CONDITION 9: NO CRACK FOUND.

(a) OPTION 1: Repeat PART 7: HIGH FREQUENCY EDDY CURRENT (HFEC) INSPECTION OF THE SKIN AT ZONE 3 AND ZONE 4 for any crack at any unrepaired zone.

(b) OPTION 2: Do PART 8: TERMINATING ACTION AT ZONE 3 AND ZONE 4 at any unrepaired zone.

NOTE: Accomplishment of PART 8: TERMINATING ACTION AT ZONE 3 AND ZONE 4 is terminating action to the repeat inspections at that zone location.

3. **Group 1, 3, Configuration 3:**
Post Repair Inspections At ZONE 1.

a. RC - Airplanes that have accomplished a repair in accordance with SB 737-53-1217 Original Issue.

(1) Contact The Boeing Company for alternative inspection and corrective action instructions and do the alternative inspections and applicable corrective actions.

b. RC - Airplanes that have not accomplished a repair in accordance with SB 737-53-1217 Original Issue.

(1) ACTION 1: Do PART 9: EXTERNAL DETAILED INSPECTION AND LOW FREQUENCY EDDY CURRENT (LFEC) INSPECTION OF THE SKIN REPAIR AT ZONE 1 for any crack.

(a) CONDITION 10: ANY CRACK FOUND.

1) Contact The Boeing Company for repair instructions and do the repair.

(b) CONDITION 11: NO CRACK FOUND.

1) CONDITION 11 (ACTION 1): Repeat PART 9: EXTERNAL DETAILED AND LOW FREQUENCY EDDY CURRENT (LFEC) INSPECTION OF THE SKIN REPAIR AT ZONE 1 for any crack.

2) CONDITION 11 (ACTION 2): Repeat PART 10: INTERNAL DETAILED AND MEDIUM FREQUENCY EDDY CURRENT (MFEC) INSPECTION OF THE SKIN REPAIR AT ZONE 1 for any crack.

(2) RC Exempt- Do PART 17: GET ACCESS.

(3) RC - ACTION 2: Do PART 10: INTERNAL DETAILED AND MEDIUM FREQUENCY EDDY CURRENT (MFEC) INSPECTION OF THE SKIN REPAIR AT ZONE 1 for any crack.

(a) CONDITION 10: ANY CRACK FOUND.

1) Contact The Boeing Company for repair instructions and do the repair.

(b) CONDITION 11: NO CRACK FOUND.

1) CONDITION 11 (ACTION 1): Repeat PART 9: EXTERNAL DETAILED AND LOW FREQUENCY EDDY CURRENT (LFEC) INSPECTION OF THE SKIN REPAIR AT ZONE 1 for any crack.

2) CONDITION 11 (ACTION 2): Repeat PART 10: INTERNAL DETAILED AND MEDIUM FREQUENCY EDDY CURRENT (MFEC) INSPECTION OF THE SKIN REPAIR AT ZONE 1 for any crack.

(4) RC Exempt - Do PART 18: CLOSE ACCESS.

4. **Group 1, 3, Configuration 3:**
Post Repair Inspections At ZONE 2.

a. RC - Airplanes that have accomplished a repair in accordance with SB 737-53-1217 Original Issue.

(1) Contact The Boeing Company for alternative inspection and corrective action instructions and do the alternative inspections and applicable corrective actions.

b. RC - Airplanes that have not accomplished a repair in accordance with SB 737-53-1217 Original Issue.

(1) ACTION 1: Do PART 11: EXTERNAL DETAILED INSPECTION AND LOW FREQUENCY EDDY CURRENT (LFEC) INSPECTION OF THE SKIN REPAIR AT ZONE 2 for any crack.

(a) CONDITION 12: ANY CRACK FOUND.

1) Contact The Boeing Company for repair instructions and do the repair.

(b) CONDITION 13: NO CRACK FOUND.

1) CONDITION 13 (ACTION 1): Repeat PART 11: EXTERNAL DETAILED AND LOW FREQUENCY EDDY CURRENT (LFEC) INSPECTION OF THE SKIN REPAIR AT ZONE 2 for any crack.

2) CONDITION 13 (ACTION 2): Repeat PART 12: INTERNAL DETAILED AND MEDIUM FREQUENCY EDDY CURRENT (MFEC) INSPECTION OF THE SKIN REPAIR AT ZONE 2 for any crack.

(2) RC Exempt- Do PART 17: GET ACCESS.

(3) RC - ACTION 2: Do PART 12: INTERNAL DETAILED AND MEDIUM FREQUENCY EDDY CURRENT (MFEC) INSPECTION OF THE SKIN REPAIR AT ZONE 2 for any crack.

(a) CONDITION 12: ANY CRACK FOUND.

1) Contact The Boeing Company for repair instructions and do the repair.

(b) CONDITION 13: NO CRACK FOUND.

1) CONDITION 13 (ACTION 1): Repeat PART 11: EXTERNAL DETAILED AND LOW FREQUENCY EDDY CURRENT (LFEC) INSPECTION OF THE SKIN REPAIR AT ZONE 2 for any crack.

2) CONDITION 13 (ACTION 2): Repeat PART 12: INTERNAL DETAILED AND MEDIUM FREQUENCY EDDY CURRENT (MFEC) INSPECTION OF THE SKIN REPAIR AT ZONE 2 for any crack.

(4) RC Exempt - Do PART 18: CLOSE ACCESS.

5. **Group 1-3, Configuration 3:**
Post Repair Inspections At ZONE 3.

a. RC - Airplanes that have accomplished a repair in accordance with SB 737-53-1217 Original Issue.

(1) Contact The Boeing Company for alternative inspection and corrective action instructions and do the alternative inspections and applicable corrective actions.

b. RC - Airplanes that have not accomplished a repair in accordance with SB 737-53-1217 Original Issue.

(1) ACTION 1: Do PART 13: EXTERNAL DETAILED INSPECTION AND LOW FREQUENCY EDDY CURRENT (LFEC) INSPECTION OF THE SKIN REPAIR AT ZONE 3 for any crack.

(a) CONDITION 14: ANY CRACK FOUND.

1) Contact The Boeing Company for repair instructions and do the repair.

(b) CONDITION 15: NO CRACK FOUND.

1) CONDITION 15 (ACTION 1): Repeat PART 13: EXTERNAL DETAILED AND LOW FREQUENCY EDDY CURRENT (LFEC) INSPECTION OF THE SKIN REPAIR AT ZONE 3 for any crack.

2) CONDITION 15 (ACTION 2): Repeat PART 14: INTERNAL DETAILED AND MEDIUM FREQUENCY EDDY CURRENT (MFEC) INSPECTION OF THE SKIN REPAIR AT ZONE 3 for any crack.

(2) RC Exempt- Do PART 17: GET ACCESS.

(3) RC - ACTION 2: Do PART 14: INTERNAL DETAILED AND MEDIUM FREQUENCY EDDY CURRENT (MFEC) INSPECTION OF THE SKIN REPAIR AT ZONE 3 for any crack.

(a) CONDITION 14: ANY CRACK FOUND.

1) Contact The Boeing Company for repair instructions and do the repair.

(b) CONDITION 15: NO CRACK FOUND.

1) CONDITION 15 (ACTION 1): Repeat PART 13: EXTERNAL DETAILED AND LOW FREQUENCY EDDY CURRENT (LFEC) INSPECTION OF THE SKIN REPAIR AT ZONE 3 for any crack.

2) CONDITION 15 (ACTION 2): Repeat PART 14: INTERNAL DETAILED AND MEDIUM FREQUENCY EDDY CURRENT (MFEC) INSPECTION OF THE SKIN REPAIR AT ZONE 3 for any crack.

(4) RC Exempt - Do PART 18: CLOSE ACCESS.

6. **Group 1-3, Configuration 3:**
Post Repair Inspections At ZONE 4.

a. RC - Airplanes that have accomplished a repair in accordance with SB 737-53-1217 Original Issue.

(1) Contact The Boeing Company for alternative inspection and corrective action instructions and do the alternative inspections and applicable corrective actions.

b. RC - Airplanes that have not accomplished a repair in accordance with SB 737-53-1217 Original Issue.

(1) ACTION 1: Do PART 15: EXTERNAL DETAILED INSPECTION AND LOW FREQUENCY EDDY CURRENT (LFEC) INSPECTION OF THE SKIN REPAIR AT ZONE 4 for any crack.

(a) CONDITION 16: ANY CRACK FOUND.

1) Contact The Boeing Company for repair instructions and do the repair.

(b) CONDITION 17: NO CRACK FOUND.

1) CONDITION 17 (ACTION 1): Repeat PART 15: EXTERNAL DETAILED AND LOW FREQUENCY EDDY CURRENT (LFEC) INSPECTION OF THE SKIN REPAIR AT ZONE 4 for any crack.

2) CONDITION 17 (ACTION 2): Repeat PART 16: INTERNAL DETAILED AND MEDIUM FREQUENCY EDDY CURRENT (MFEC) INSPECTION OF THE SKIN REPAIR AT ZONE 4 for any crack.

(2) RC Exempt- Do PART 17: GET ACCESS.

(3) RC - ACTION 2: Do PART 16: INTERNAL DETAILED AND MEDIUM FREQUENCY EDDY CURRENT (MFEC) INSPECTION OF THE SKIN REPAIR AT ZONE 4 for any crack.

(a) CONDITION 16: ANY CRACK FOUND.

1) Contact The Boeing Company for repair instructions and do the repair.

(b) CONDITION 17: NO CRACK FOUND.

1) CONDITION 17 (ACTION 1): Repeat PART 15: EXTERNAL DETAILED AND LOW FREQUENCY EDDY CURRENT (LFEC) INSPECTION OF THE SKIN REPAIR AT ZONE 4 for any crack.

2) CONDITION 17 (ACTION 2): Repeat PART 16: INTERNAL DETAILED AND MEDIUM FREQUENCY EDDY CURRENT (MFEC) INSPECTION OF THE SKIN REPAIR AT ZONE 4 for any crack.

(4) RC Exempt - Do PART 18: CLOSE ACCESS.

7. Put the airplane back to a serviceable condition.

Group 1, Configuration 1-2; Group 3, Configuration 1-2:
PART 1: HIGH FREQUENCY EDDY CURRENT (HFEC) INSPECTION OF THE SKIN AT ZONE 1, ZONE 2, ZONE 3 AND ZONE 4.

1. Do a HFEC inspection of the skin at ZONE 1 AND ZONE 2 for any crack, in accordance with FIGURE 2.

2. Do a HFEC inspection of the skin at ZONE 3 AND ZONE 4 any crack, in accordance with FIGURE 3.

Group 1, Configuration 1-2; Group 3, Configuration 1-2:
PART 2: SKIN REPAIR AT ZONE 1.

1. Do a skin repair in accordance with FIGURE 6.

Group 1, Configuration 1-2; Group 3, Configuration 1-2:
PART 3: SKIN REPAIR AT ZONE 2.

1. **Group 1, Configuration 1-2:**
   Do a skin repair in accordance with FIGURE 7.

2. **Group 3, Configuration 1-2:**
   Do a skin repair in accordance with FIGURE 10.

Group 1, Configuration 1-2; Group 2, Configuration 1-2; Group 3, Configuration 1-2:
PART 4: SKIN REPAIR AT ZONE 3.

1. Do a skin repair in accordance with FIGURE 8.

Group 1, Configuration 1-2; Group 2, Configuration 1-2; Group 3, Configuration 1-2:
PART 5: SKIN REPAIR AT ZONE 4.

1. Do a skin repair in accordance with FIGURE 9.

Group 1, Configuration 1-2; Group 3, Configuration 1-2:
PART 6: TERMINATING ACTION AT ZONE 1, ZONE 2, ZONE 3 AND ZONE 4.

1. Do the terminating action ZONE 1 AND ZONE 2 in accordance with FIGURE 4.

2. Do the terminating action ZONE 3 AND ZONE 4 in accordance with FIGURE 5.

Group 2, Configuration 1-2:
PART 7: HIGH FREQUENCY EDDY CURRENT (HFEC) INSPECTION OF THE SKIN AT ZONE 3 AND ZONE 4.

1. Do a HFEC inspection of the skin, for any crack, in accordance with FIGURE 3.

Group 2, Configuration 1-2:
PART 8: TERMINATING ACTION AT ZONE 3 AND ZONE 4.

1. Do the terminating action in accordance with FIGURE 5.

Group 1, 3, Configuration 3:
PART 9: EXTERNAL DETAILED AND LOW FREQUENCY EDDY CURRENT (LFEC) INSPECTION OF THE SKIN REPAIR AT ZONE 1.

1. Do an external detailed inspection of the skin around the repair doubler edge, and an LFEC inspection of the skin for any crack, in accordance with FIGURE 11.

Group 1, 3, Configuration 3:
PART 10: INTERNAL DETAILED AND MEDIUM FREQUENCY EDDY CURRENT (MFEC) INSPECTION OF THE SKIN REPAIR AT ZONE 1.

1. Do a detailed and MFEC inspection of the internal skin for any crack, in accordance with FIGURE 12.

Group 1, 3, Configuration 3:
PART 11: EXTERNAL DETAILED AND LOW FREQUENCY EDDY CURRENT (LFEC) INSPECTION OF THE SKIN REPAIR AT ZONE 2.

1. **Group 1, Configuration 3:**
   Do an external detailed inspection of the skin around the repair doubler edge, and an LFEC inspection of the skin for any crack, in accordance with FIGURE 13.

2. **Group 3, Configuration 3:**
   Do a detailed inspection of the skin around the repair doubler edge and LFEC inspection of the skin for any crack, in accordance with FIGURE 14.

Group 1, 3, Configuration 3:
PART 12: INTERNAL DETAILED AND MEDIUM FREQUENCY EDDY CURRENT (MFEC) INSPECTION OF THE SKIN REPAIR AT ZONE 2.

1. Do a detailed and MFEC inspection of the internal skin for any crack, in accordance with FIGURE 15.

Group 1-3, Configuration 3:
PART 13: EXTERNAL DETAILED AND LOW FREQUENCY EDDY CURRENT (LFEC) INSPECTION OF THE SKIN REPAIR AT ZONE 3.

1. Do an external detailed inspection of the skin around the repair doubler edge, and an LFEC inspection of the skin for any crack, in accordance with FIGURE 16.

Group 1-3, Configuration 3:
PART 14: INTERNAL DETAILED AND MEDIUM FREQUENCY EDDY CURRENT (MFEC) INSPECTION OF THE SKIN REPAIR AT ZONE 3.

1. Do a detailed and MFEC inspection of the internal skin for any crack, in accordance with FIGURE 17.

Group 1-3, Configuration 3:
PART 15: EXTERNAL DETAILED AND LOW FREQUENCY EDDY CURRENT (LFEC) INSPECTION OF THE SKIN REPAIR AT ZONE 4.

1. Do an external detailed inspection of the skin around the repair doubler edge, and an LFEC inspection of the skin for any crack, in accordance with FIGURE 18.

Group 1-3, Configuration 3:
PART 16: INTERNAL DETAILED AND MEDIUM FREQUENCY EDDY CURRENT (MFEC) INSPECTION OF THE SKIN REPAIR AT ZONE 4.

1. Do a detailed and MFEC inspection of the internal skin for any crack, in accordance with FIGURE 19.

PART 17: GET ACCESS

1. Remove and keep passenger seats as necessary. Refer to 737-600/700/800/900 AMM 25-22-00 as an accepted procedure.

2. Remove and keep sidewall panels as necessary. Refer to 737-600/700/800/900 AMM 25-21-46 as an accepted procedure.

3. Remove and keep wall insulation blankets as necessary. Refer to 737-600/700/800/900 AMM 25-80-00 as an accepted procedure.

4. Remove and keep carpet as necessary. Refer to 737-600/700/800/900 AMM 25-27-15 as an accepted procedure.

5. Remove and keep floor panels as necessary. Refer to 737-600/700/800/900 AMM 53-21-00 as an accepted procedure.

PART 18: CLOSE ACCESS

1. Install kept floor panels. Refer to 737-600/700/800/900 AMM 53-21-00 as an accepted procedure.

2. Install kept carpet. Refer to 737-600/700/800/900 AMM 25-27-15 as an accepted procedure.

3. Install kept wall insulation blankets. Refer to 737-600/700/800/900 AMM 25-80-00 as an accepted procedure.

4. Install kept sidewall panels. Refer to 737-600/700/800/900 AMM 25-21-46 as an accepted procedure.

5. Install kept passenger seats. Refer to 737-600/700/800/900 AMM 25-22-00 as an accepted procedure.

2317080

THIS FIGURE IS DELETED

FIGURE 1: DELETED AT REVISION 1
(SHEET 1 OF 1)

This Figure applies only to: Group 1, Configuration 1-2; Group 3, Configuration 1-2.

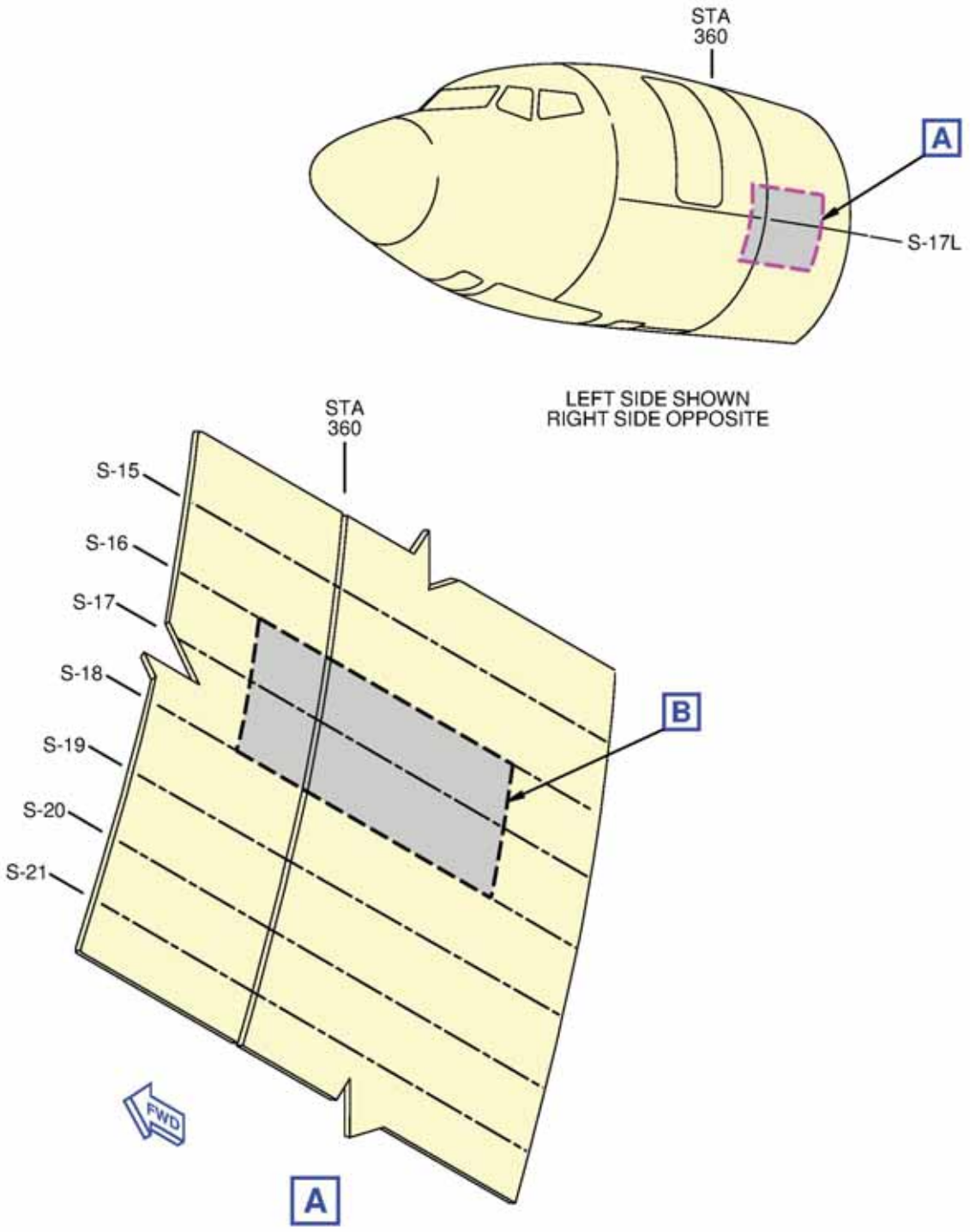

V43636

FIGURE 2: DO HIGH FREQUENCY EDDY CURRENT (HFEC) INSPECTION- ZONE 1 AND ZONE 2 (SHEET 1 OF 3)

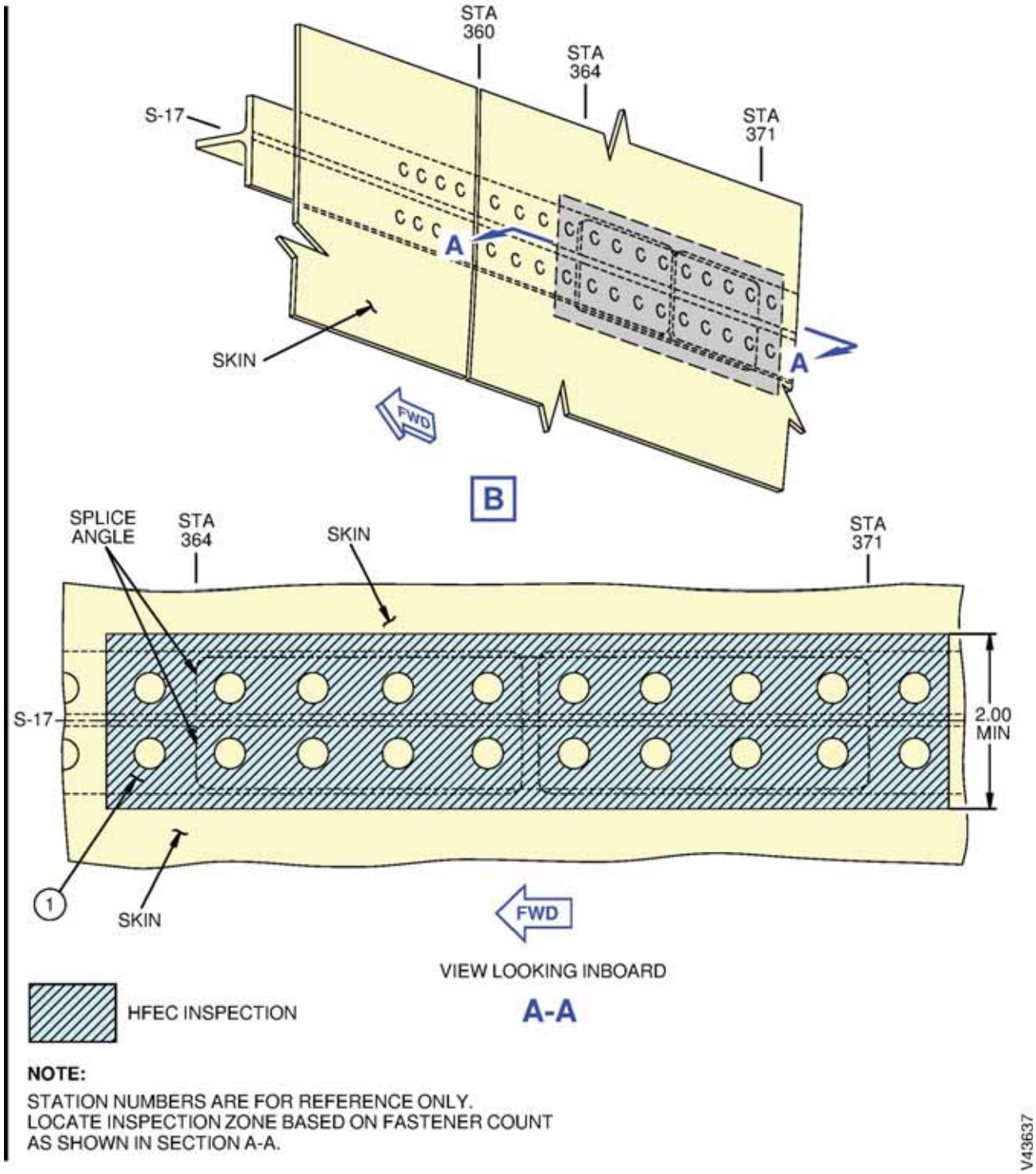

FIGURE 2: DO HIGH FREQUENCY EDDY CURRENT (HFEC) INSPECTION- ZONE 1 AND ZONE 2 (SHEET 2 OF 3)

ALERT **ALERT**

The step numbers shown below agree with the numbers shown in the circle symbols in the figure. The QTY numbers shown below are the number of parts necessary for this figure.

Step	Task	Name	Identification	Qty	More Data
1	Inspect	SKIN	ZONE 1	-	(a)(b)
	Inspect	SKIN	ZONE 2	-	(a)(b)
(a) Do a surface High Frequency Eddy Current (HFEC) inspection of the skin at S-17L and S-17R, for any crack. Inspect the skin in accordance with 737 NDT Manual Part 6, Subject 51-00-00, Procedure 4 or Procedure 23.					
(b) Make sure inspection area extends a minimum of 1 inch above and below S-17L and S-17R around each fastener.					

FIGURE 2: DO HIGH FREQUENCY EDDY CURRENT (HFEC) INSPECTION- ZONE 1 AND ZONE 2 (SHEET 3 OF 3)

ALERT **ALERT**

This Figure applies only to: Group 1, Configuration 1-2; Group 2, Configuration 1-2; Group 3, Configuration 1-2.

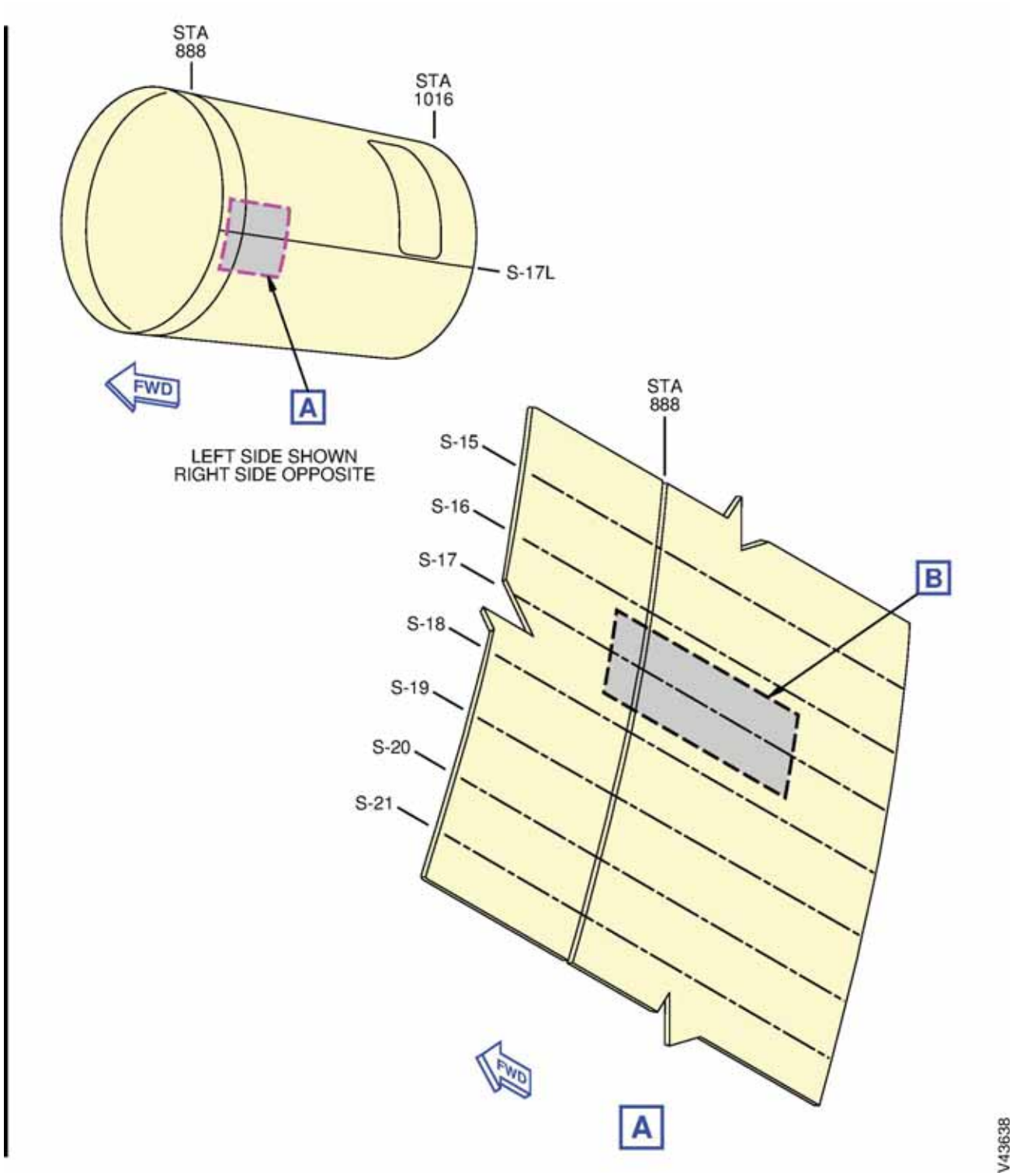

FIGURE 3: DO HIGH FREQUENCY EDDY CURRENT (HFEC) INSPECTION- ZONE 3 AND ZONE 4 (SHEET 1 OF 3)

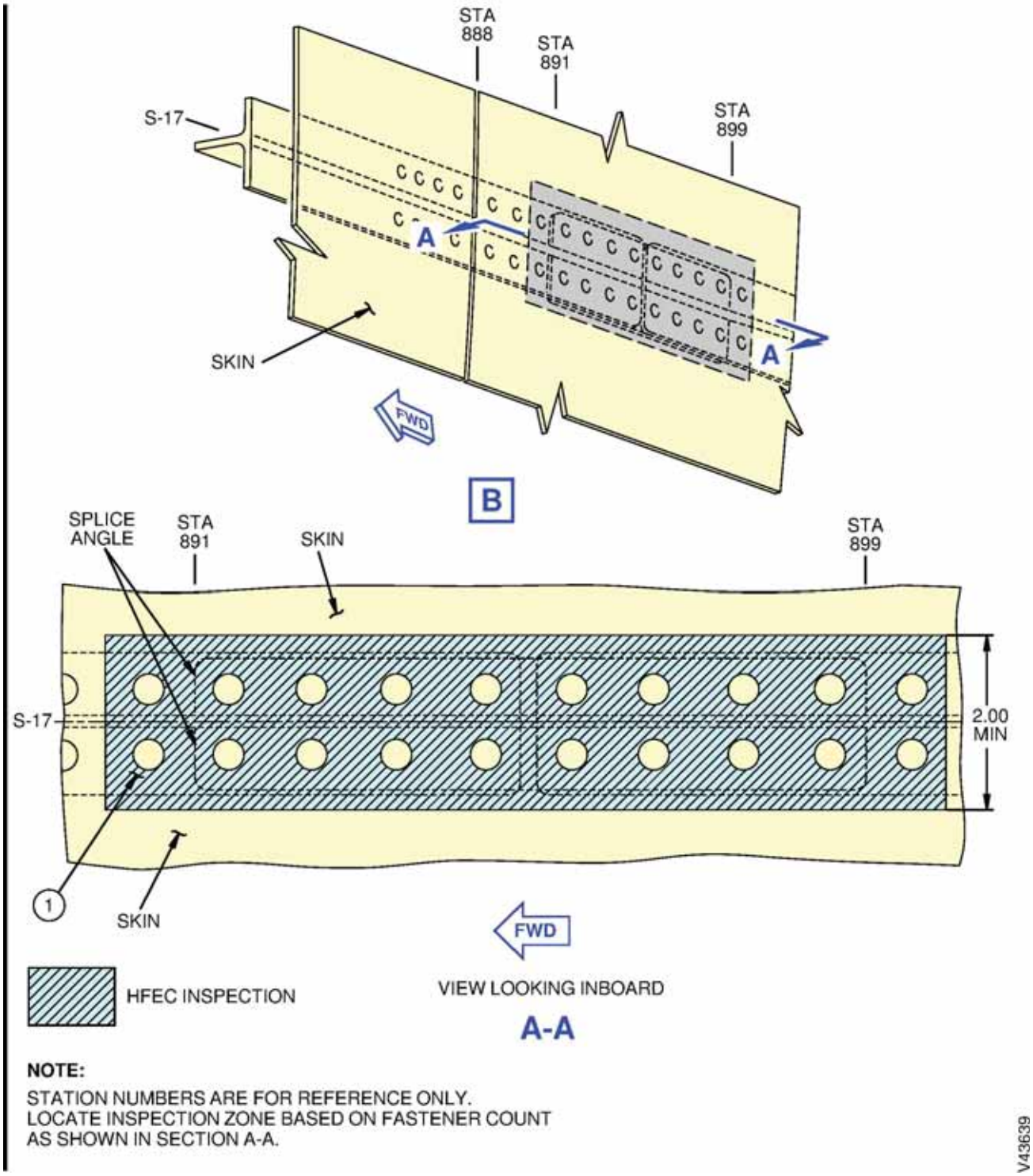

FIGURE 3: DO HIGH FREQUENCY EDDY CURRENT (HFEC) INSPECTION- ZONE 3 AND ZONE 4 (SHEET 2 OF 3)

ALERT **ALERT**

The step numbers shown below agree with the numbers shown in the circle symbols in the figure. The QTY numbers shown below are the number of parts necessary for this figure.

Step	Task	Name	Identification	Qty	More Data
1	Inspect	SKIN	ZONE 3	-	(a)(b)
	Inspect	SKIN	ZONE 4	-	(a)(b)
(a) Do a surface High Frequency Eddy Current (HFEC) inspection of the skin at S-17L and S-17R, for any crack. Inspect the skin in accordance with 737 NDT Manual Part 6, Subject 51-00-00, Procedure 4 or Procedure 23.					
(b) Make sure inspection area extends a minimum of 1 inch above and below S-17L and S-17R around each fastener.					

FIGURE 3: DO HIGH FREQUENCY EDDY CURRENT (HFEC) INSPECTION- ZONE 3 AND ZONE 4 (SHEET 3 OF 3)

This Figure applies only to: Group 1, Configuration 1-2; Group 3, Configuration 1-2.

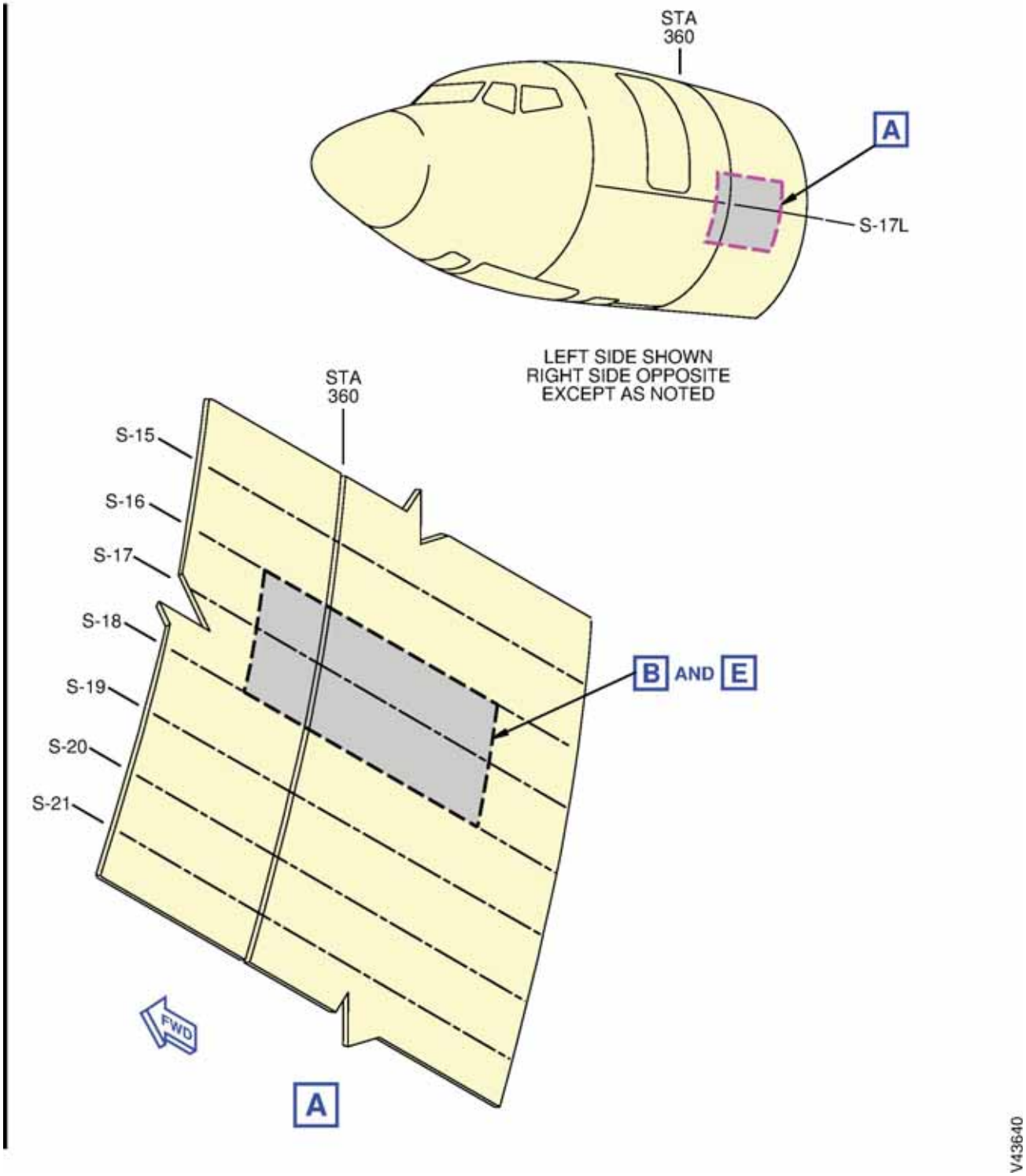

FIGURE 4: TERMINATING ACTION AT ZONE 1 AND ZONE 2 (SHEET 1 OF 7)

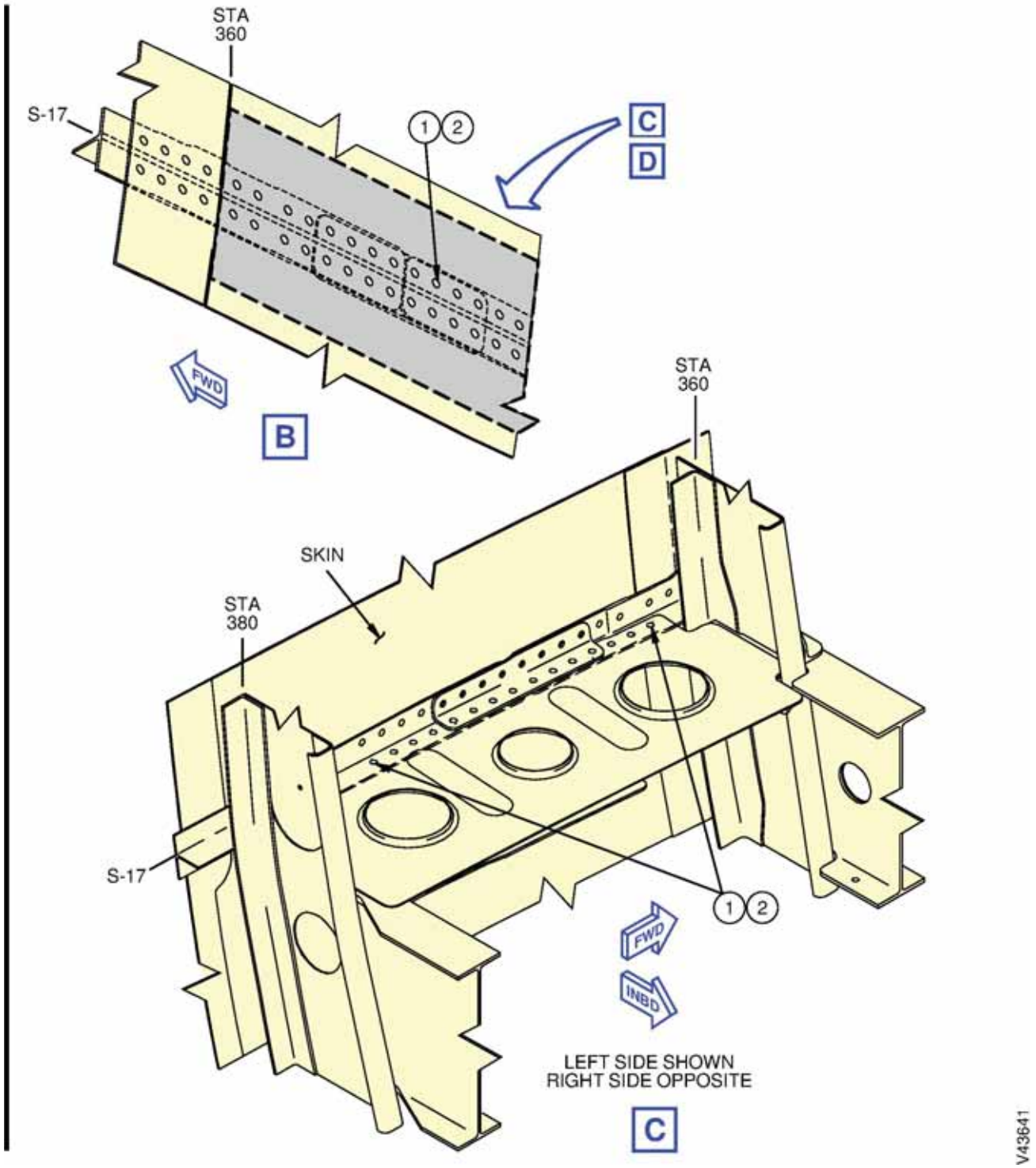

FIGURE 4: TERMINATING ACTION AT ZONE 1 AND ZONE 2 (SHEET 2 OF 7)

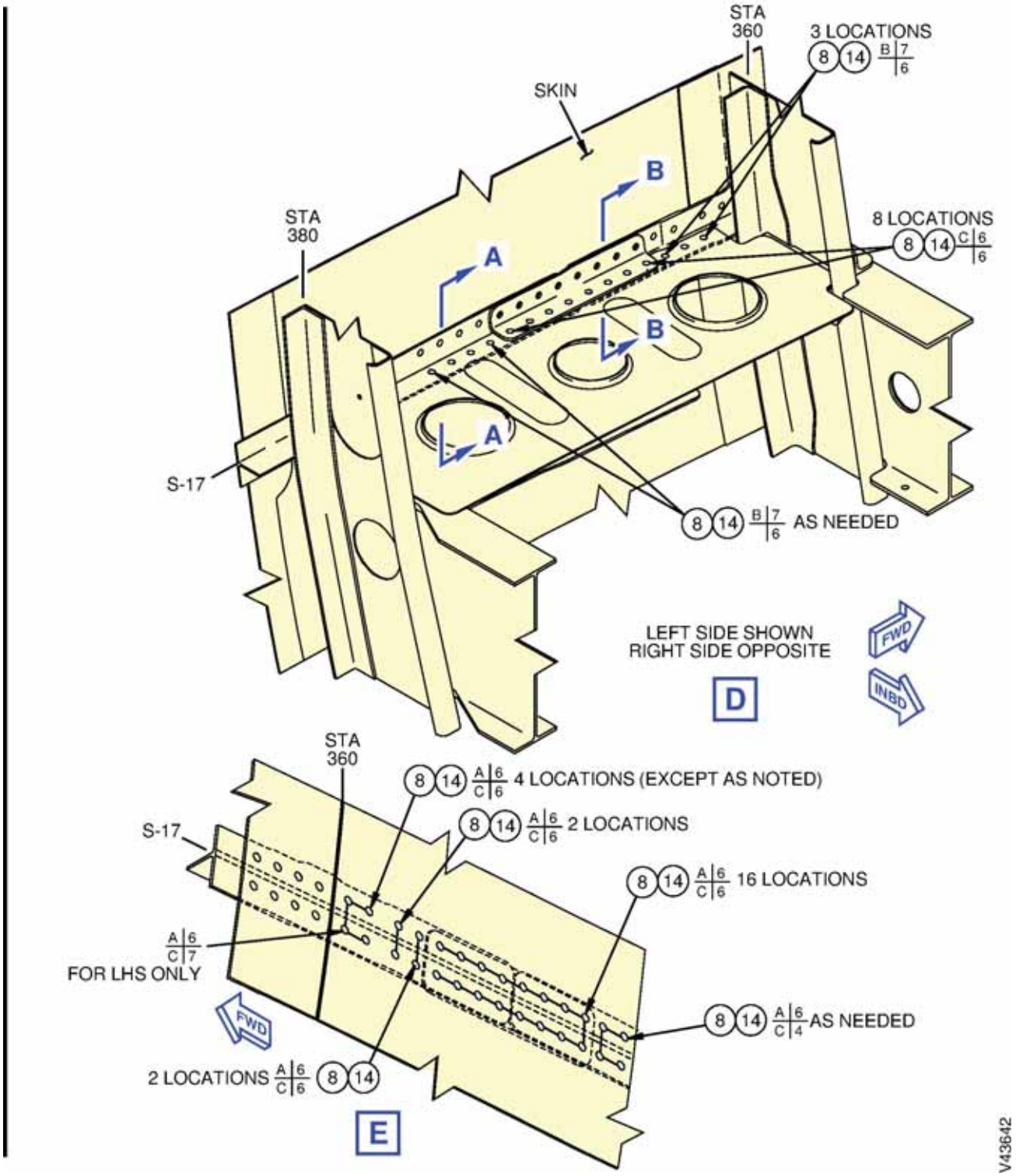

FIGURE 4: TERMINATING ACTION AT ZONE 1 AND ZONE 2 (SHEET 3 OF 7)

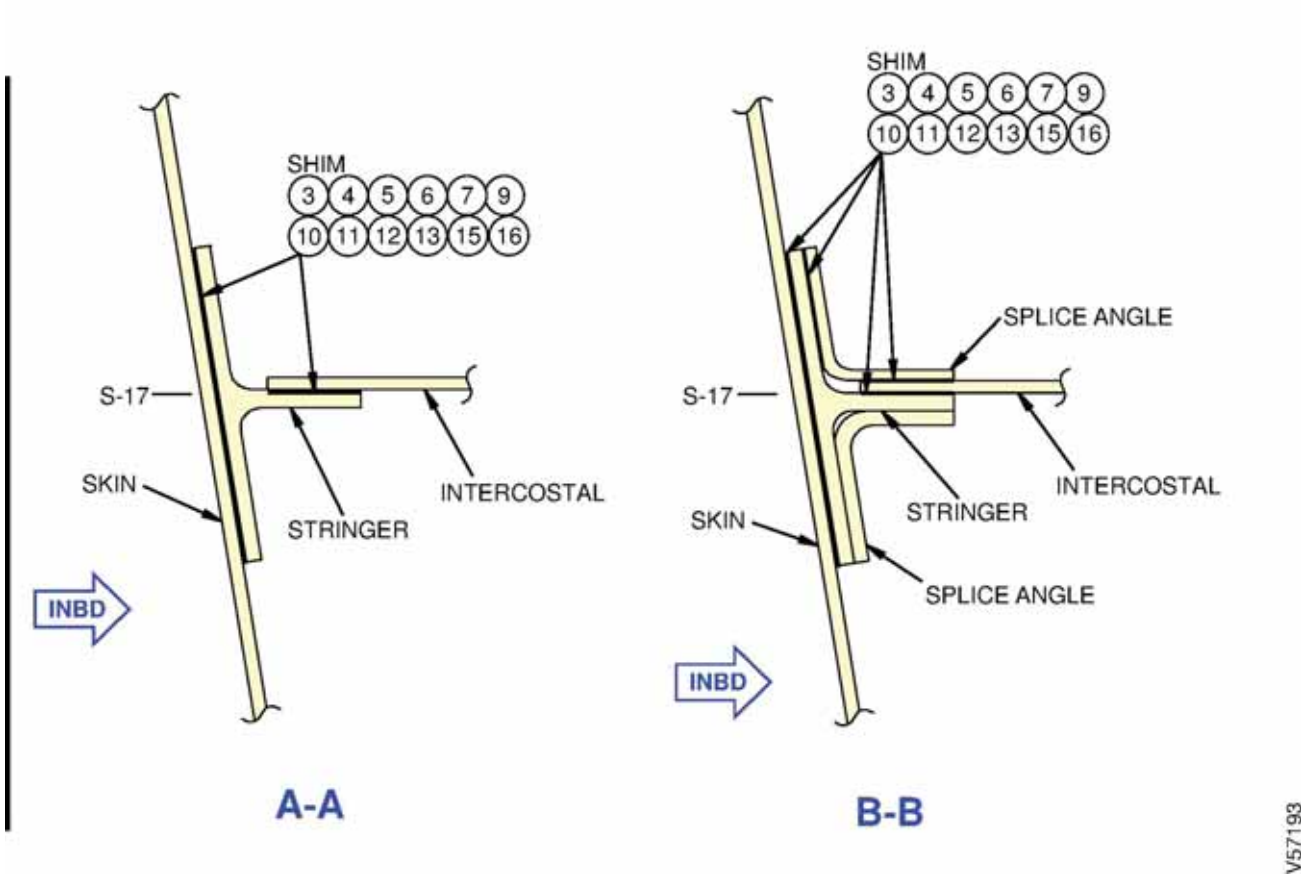

The step numbers shown below agree with the numbers shown in the circle symbols in the figure. The QTY numbers shown below are the number of parts necessary for this figure.

Step	Task	Name	Identification	Qty	More Data
1	Remove	FASTENERS	-	-	(a)
2	Inspect	EXISTING FASTENER HOLES	-	-	(m)(n)
3	Remove	SEALANT	STRINGER FLANGE	-	(b)
4	Measure	GAP	-	-	(c)(d)
5	Make	SHIM/TAPERED FILLER	-	-	(e)(l)
6	Apply	CHEMICAL CONVERSION COATING	TYPE II, CLASS A	-	(f)
	Apply	PRIMER	BMS 10-11, TYPE I	-	(g)
7	Align	SHIM/TAPERED FILLER	-	-	

FIGURE 4: TERMINATING ACTION AT ZONE 1 AND ZONE 2 (SHEET 4 OF 7)

Step	Task	Name	Identification	Qty	More Data
8	Drill	SHIM/TAPERED FILLER	-	-	(h)(q)
9	Remove	SHIM/TAPERED FILLER	-	-	
10	Clean/Deburr	SHIM/TAPERED FILLER	-	-	(l)
11	Clean	SKIN, STRINGER, SPLICE ANGLE, INTERCOSTAL	-	-	(p)
12	Apply	SEALANT	BMS 5-95	-	(i)
13	Align	SHIM/TAPERED FILLER	-	-	(o)
14	Install (New)	FASTENERS	-	-	(j)(r)
15	Apply	SEALANT	BMS 5-95	-	(k)
16	Apply	CORROSION INHIBITING COMPOUND	BMS 3-23, TYPE II, CLASS 2	-	(s)

(a) Remove fasteners as shown. Refer to 737-600 SRM 51-40-02, 737-700 SRM 51-40-02, or 737-800 SRM 51-40-02 as an accepted procedure.

(b) Remove sealant and make sure to take caution not to scratch or create any tool marks on the faying surface of mating parts. Refer to SOPM 20-50-19 as an accepted procedure.

(c) Measure the gap between the stringer flange and the fuselage skin. Measure gap between splice angle and stringer flange. If any gap is more than 0.050 inches, contact The Boeing Company for repair instructions and do the repair.

(d) Measure the gap between the stringer flange and the intercostal. Measure gap between splice angle and intercostal. If any gap is more than 0.050 inches, contact The Boeing Company for repair instructions and do the repair.

(e) Make shim/tapered filler from 2024-T3 Clad sheet per QQ-A-250/5. Size the shim/tapered filler to match the gap so that pull up after fastener installation does not exceed 0.010 inches.

(f) Apply chemical conversion coating to all bare surfaces of the repair parts and existing structure. Omit coating in fastener holes. Refer to SOPM 20-43-03 as an accepted procedure.

(g) Apply two layers of BMS 10-11 Type I primer to all unprimed surfaces of the repair parts and existing structure. Omit coating in fastener holes. Refer to SOPM 20-41-02 as an accepted procedure.

(h) Temporarily position shim/tapered filler firmly against the adjacent structure, then backdrill existing fastener holes through the shim/tapered filler. Refer to fastener code table for final hole size. Refer to 737-600 SRM 51-10-02, 737-700 SRM 51-10-02, or 737-800 SRM 51-10-02 as an accepted procedure.

(i) Apply BMS 5-95 sealant to all mating surfaces during installation. Refer to SOPM 20-50-19 as an accepted procedure.

FIGURE 4: TERMINATING ACTION AT ZONE 1 AND ZONE 2 (SHEET 5 OF 7)

ALERT **ALERT**

Step	Task	Name	Identification	Qty	More Data
(j) Refer to fastener code table for installation of fasteners. Refer to 737-600 SRM 51-40-02, 737-700 SRM 51-40-02 or 737-800 SRM 51-40-02 as an accepted procedure.					
(k) Edge fillet seal around entire periphery of internal structure affected by this modification. Refer to SOPM 20-50-19 as an accepted procedure.					
(l) Break all sharp edges.					
(m) Do a High Frequency Eddy Current (HFEC) inspection of the countersunk surface at fastener holes for any crack. Inspect in accordance with 737 NDT Manual Part 6, 53-30-00, Procedure 1 (Meter Display), or 737 NDT Manual Part 6, 53-30-00, Procedure 3 (Rotary Probe), or 737 NDT Manual Part 6, 53-30-00, Procedure 4 (Impedance Plane Display).					
(n) Do an open hole HFEC inspection of the fastener holes for any crack. Inspect all fastener holes in accordance with 737 NDT Manual Part 6, 51-00-00, Procedure 16.					
(o) Install temporary hardware to clamp repair part with structure for sealant squeeze out. Make sure fastener holes are aligned. Allow sealant to cure before removing temporary hardware. Refer to SOPM 20-50-19 as an accepted procedure.					
(p) Remove all debris from faying surfaces. Deburr accessible hole edges. Take caution not to scratch or create any tool marks on the surface of mating parts.					
(q) Install temporary fasteners to tightly clamp the structure as drilling progresses to prevent debris from getting into voids between part surfaces. Use newly sharpened drills and reamers. Deburr accessible hole edges. Refer to 737-600 SRM 51-10-02, 737-700 SRM 51-10-02, or 737-800 SRM 51-10-02 as an accepted procedure.					
(r) Install all rivets dry. Ensure fastener holes are free of sealant and/or contamination before rivet installation.					
(s) Apply Corrosion Inhibiting Compound (CIC) to the internal area of work. Refer to SOPM 20-41-05 as an accepted procedure.					

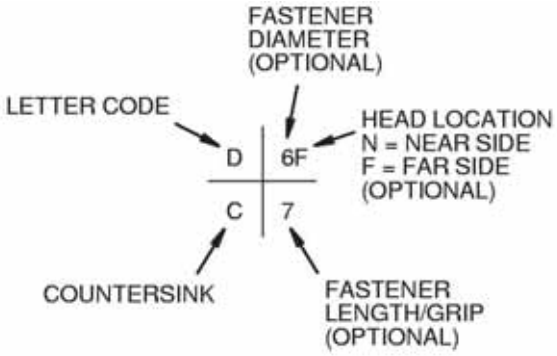

EXAMPLE OF FASTENER SYMBOL

2314995

The codes shown below agree with the letter shown in the upper left corner of the fastener symbols in the figure. A number in the lower right corner gives the grip length of the fastener. The QTY numbers shown below are the number of fasteners necessary for this figure.

FIGURE 4: TERMINATING ACTION AT ZONE 1 AND ZONE 2 (SHEET 6 OF 7)

Code	Name	Identification	Qty	Hole Dia	More Data
A	Bolt	BACB30NW6K( )Y	28	0.216 - 0.219	(a)(b)(c)
	Collar	BACC30R6	28	-	-
B	Rivet	BACR15ET7D( )	7	0.225 - 0.231	(a)(c)
C	Bolt	BACB30NX6K( )Y	8	0.216 - 0.219	(a)(b)
	Collar	BACC30R6	8	-	-
(a) Install fasteners. Refer to 737-600 SRM 51-40-02, 737-700 SRM 51-40-02, or 737-800 SRM 51-40-02 as an accepted procedure.					
(b) Install fasteners wet with BMS 5-95. Refer to 737-600 SRM 51-20-05, 737-700 SRM 51-20-05, or 737-800 SRM 51-20-05 as an accepted procedure.					
(c) If more fasteners were required for removal, install this fastener type at the location required.					

FIGURE 4: TERMINATING ACTION AT ZONE 1 AND ZONE 2 (SHEET 7 OF 7)

ALERT **ALERT**

This Figure applies only to: Group 1, Configuration 1-2; Group 2, Configuration 1-2; Group 3, Configuration 1-2.

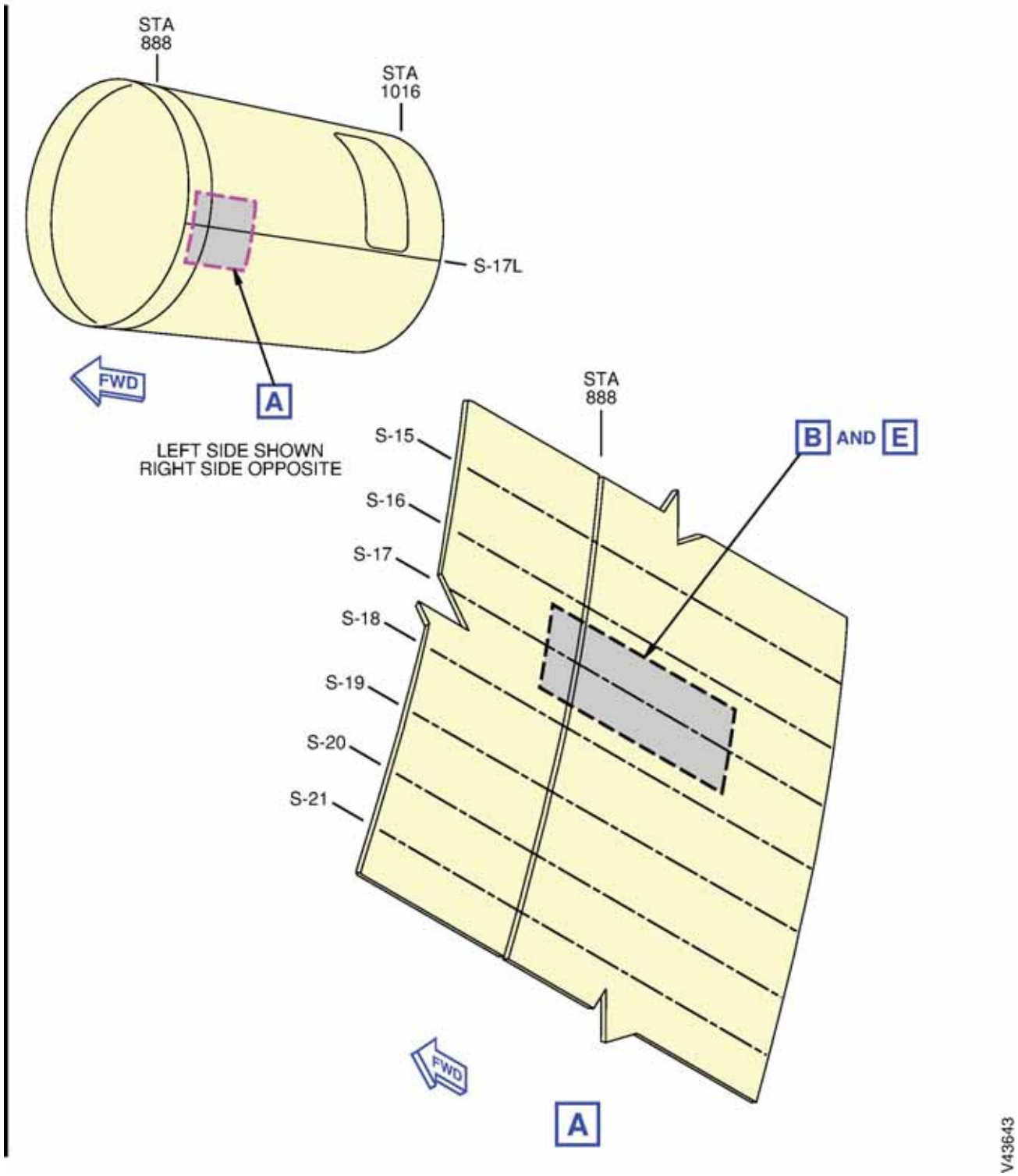

FIGURE 5: TERMINATING ACTION AT ZONE 3 AND ZONE 4 (SHEET 1 OF 7)

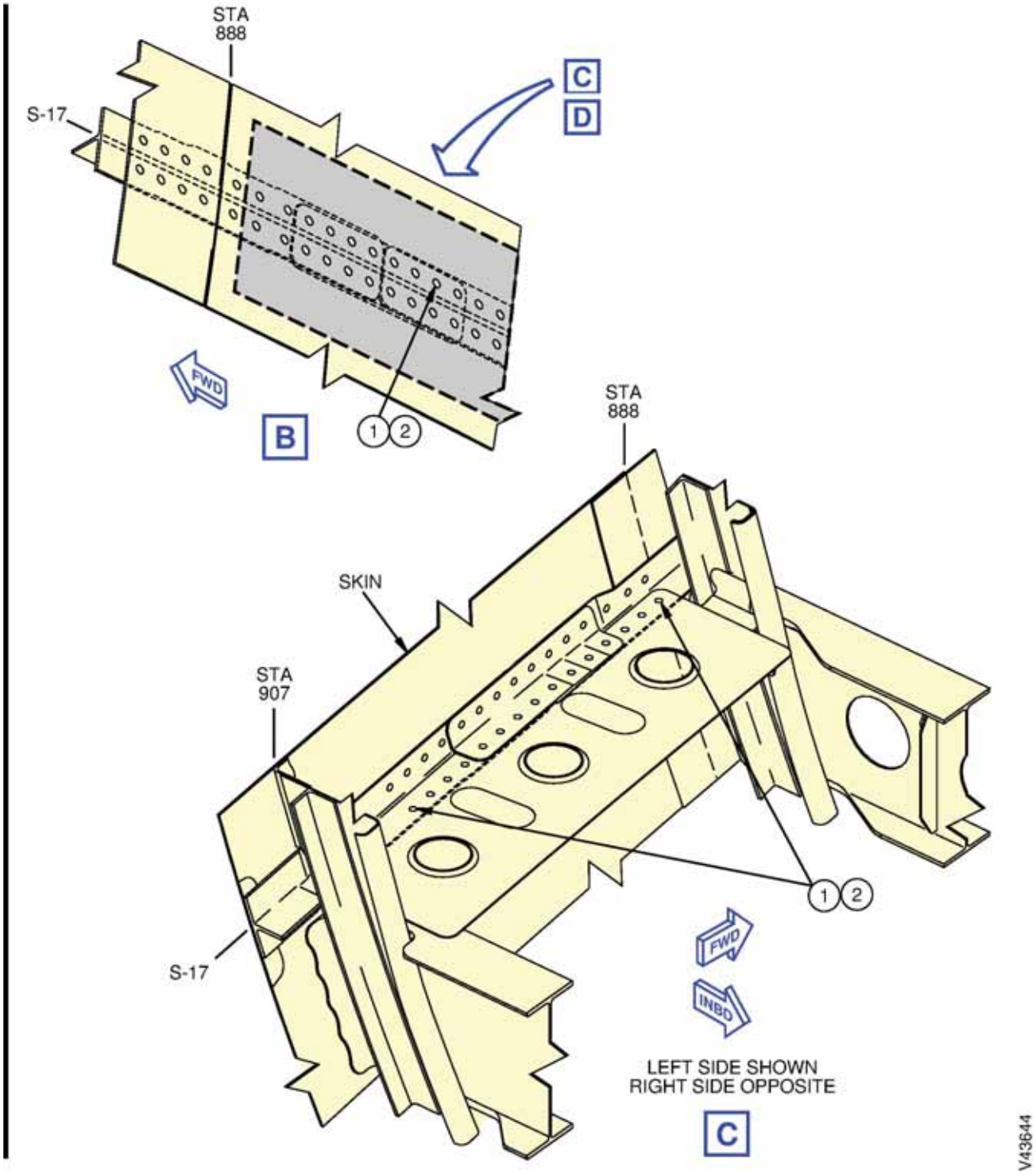

FIGURE 5: TERMINATING ACTION AT ZONE 3 AND ZONE 4 (SHEET 2 OF 7)

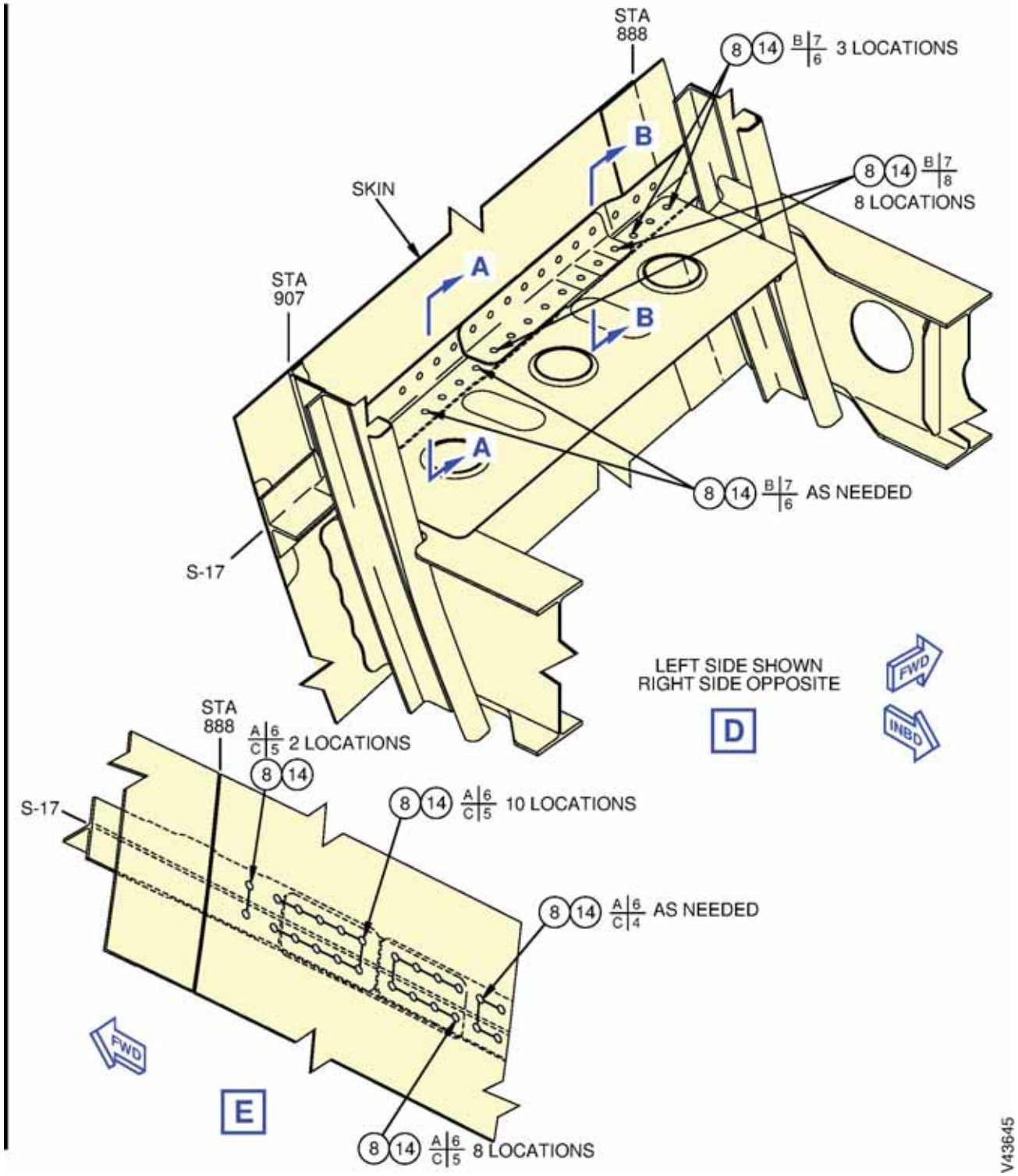

FIGURE 5: TERMINATING ACTION AT ZONE 3 AND ZONE 4 (SHEET 3 OF 7)

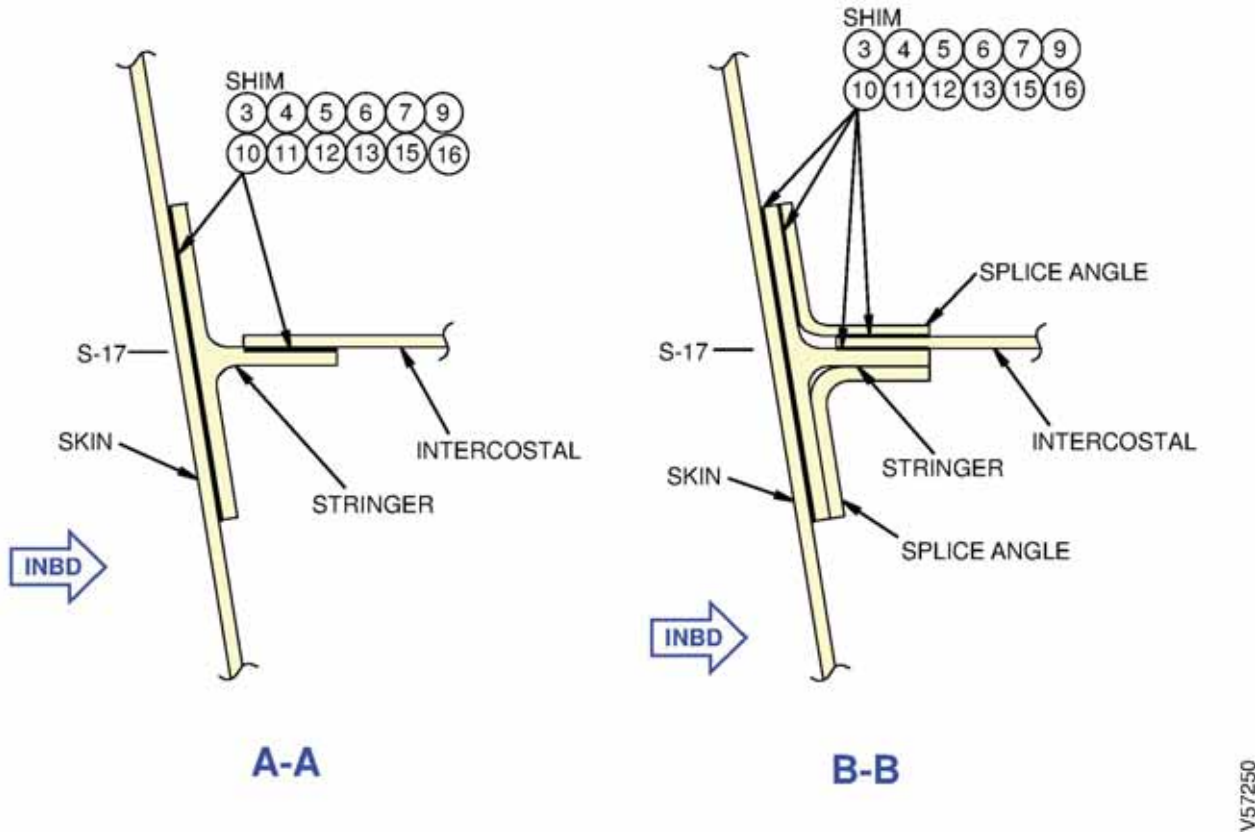

The step numbers shown below agree with the numbers shown in the circle symbols in the figure. The QTY numbers shown below are the number of parts necessary for this figure.

Step	Task	Name	Identification	Qty	More Data
1	Remove	FASTENERS	-	-	(a)
2	Inspect	EXISTING FASTENER HOLES	-	-	(m)(n)
3	Remove	SEALANT	STRINGER FLANGE	-	(b)
4	Measure	GAP	-	-	(c)(d)
5	Make	SHIM/TAPERED FILLER	-	-	(e)(l)
6	Apply	CHEMICAL CONVERSION COATING	TYPE II, CLASS A	-	(f)
	Apply	PRIMER	BMS 10-11, TYPE I	-	(g)
7	Align	SHIM/TAPERED FILLER	-	-	

FIGURE 5: TERMINATING ACTION AT ZONE 3 AND ZONE 4 (SHEET 4 OF 7)

Step	Task	Name	Identification	Qty	More Data
8	Drill	SHIM/TAPERED FILLER	-	-	(h)(q)
9	Remove	SHIM/TAPERED FILLER	-	-	
10	Clean/Deburr	SHIM/TAPERED FILLER	-	-	(l)
11	Clean	SKIN, STRINGER, SPLICE ANGLE, INTERCOSTAL	-	-	(p)
12	Apply	SEALANT	BMS 5-95	-	(i)
13	Align	SHIM/TAPERED FILLER	-	-	(o)
14	Install (New)	FASTENERS	-	-	(j)(r)
15	Apply	SEALANT	BMS 5-95	-	(k)
16	Apply	CORROSION INHIBITING COMPOUND	BMS 3-23, TYPE II, CLASS 2	-	(s)

(a) Remove fasteners as shown. Refer to 737-600 SRM 51-40-02, 737-700 SRM 51-40-02, 737-800 SRM 51-40-02, or 737-800BCF SRM 51-40-02 as an accepted procedure.

(b) Remove sealant and make sure to take caution not to scratch or create any tool marks on the faying surface of mating parts. Refer to SOPM 20-50-19 as an accepted procedure.

(c) Measure the gap between the stringer flange and the fuselage skin. Measure gap between splice angle and stringer flange. If any gap is more than 0.050 inches, contact The Boeing Company for repair instructions and do the repair.

(d) Measure the gap between the stringer flange and the intercostal. Measure gap between splice angle and intercostal. If any gap is more than 0.050 inches, contact The Boeing Company for repair instructions and do the repair.

(e) Make shim/tapered filler from 2024-T3 Clad sheet per QQ-A-250/5. Size the shim/tapered filler to match the gap so that pull up after fastener installation does not exceed 0.010 inches.

(f) Apply chemical conversion coating to all bare surfaces of the repair parts and existing structure. Omit coating in fastener holes. Refer to SOPM 20-43-03 as an accepted procedure.

(g) Apply two layers of BMS 10-11 Type I primer to all unprimed surfaces of the repair parts and existing structure. Omit coating in fastener holes. Refer to SOPM 20-41-02 as an accepted procedure.

(h) Temporarily position shim/tapered filler firmly against the adjacent structure, then backdrill existing fastener holes through the shim/tapered filler. Refer to fastener code table for final hole size. Refer to 737-600 SRM 51-10-02, 737-700 SRM 51-10-02, 737-800 SRM 51-10-02, or 737-800BCF SRM 51-10-02 as an accepted procedure.

(i) Apply BMS 5-95 sealant to all mating surfaces during installation. Refer to SOPM 20-50-19 as an accepted procedure.

FIGURE 5: TERMINATING ACTION AT ZONE 3 AND ZONE 4 (SHEET 5 OF 7)

Step	Task	Name	Identification	Qty	More Data
(j) Refer to fastener code table for installation of fasteners. Refer to 737-600 SRM 51-40-02, 737-700 SRM 51-40-02, 737-800 SRM 51-40-02, or 737-800BCF SRM 51-40-02 as an accepted procedure.					
(k) Edge fillet seal around entire periphery of internal structure affected by this modification. Refer to SOPM 20-50-19 as an accepted procedure.					
(l) Break all sharp edges.					
(m) Do a High Frequency Eddy Current (HFEC) inspection of the countersunk surface at fastener holes for any crack. Inspect in accordance with 737 NDT Manual Part 6, 53-30-00, Procedure 1 (Meter Display), or 737 NDT Manual Part 6, 53-30-00, Procedure 3 (Rotary Probe), or 737 NDT Manual Part 6, 53-30-00, Procedure 4 (Impedance Plane Display).					
(n) Do an open hole HFEC inspection of the fastener holes for any crack. Inspect all fastener holes in accordance with 737 NDT Manual Part 6, 51-00-00, Procedure 16.					
(o) Install temporary hardware to clamp repair part with structure for sealant squeeze out. Make sure fastener holes are aligned. Allow sealant to cure before removing temporary hardware. Refer to SOPM 20-50-19 as an accepted procedure.					
(p) Remove all debris from faying surfaces. Deburr accessible hole edges. Take caution not to scratch or create any tool marks on the surface of mating parts.					
(q) Install temporary fasteners to tightly clamp the structure as drilling progresses to prevent debris from getting into voids between part surfaces. Use newly sharpened drills and reamers. Deburr accessible hole edges. Refer to 737-600 SRM 51-10-02, 737-700 SRM 51-10-02, 737-800 SRM 51-10-02, or 737-800BCF SRM 51-10-02 as an accepted procedure.					
(r) Install all rivets dry. Ensure fastener holes are free of sealant and/or contamination before rivet installation.					
(s) Apply Corrosion Inhibiting Compound (CIC) to the internal area of work. Refer to SOPM 20-41-05 as an accepted procedure.					

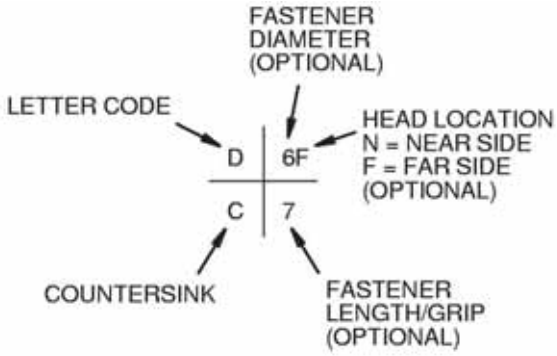

EXAMPLE OF FASTENER SYMBOL

2314995

FIGURE 5: TERMINATING ACTION AT ZONE 3 AND ZONE 4 (SHEET 6 OF 7)

ALERT **ALERT**

The codes shown below agree with the letter shown in the upper left corner of the fastener symbols in the figure. A number in the lower right corner gives the grip length of the fastener. The QTY numbers shown below are the number of fasteners necessary for this figure.

Code	Name	Identification	Qty	Hole Dia	More Data
A	Bolt	BACB30NW6K( )Y	24	0.216 - 0.219	(a)(b)(c)
	Collar	BACC30R6	24	-	-
B	Rivet	BACR15ET7D( )	15	0.225 - 0.231	(a)(c)
(a) Install fasteners. Refer to 737-600 SRM 51-40-02, 737-700 SRM 51-40-02, 737-800 SRM 51-40-02, or 737-800BCF SRM 51-40-02 as an accepted procedure.					
(b) Install fasteners wet with BMS 5-95. Refer to 737-600 SRM 51-20-05, 737-700 SRM 51-20-05, 737-800 SRM 51-20-05, or 737-800BCF SRM 51-20-05 as an accepted procedure.					
(c) If more fasteners were required for removal, install this fastener type at the location required.					

FIGURE 5: TERMINATING ACTION AT ZONE 3 AND ZONE 4 (SHEET 7 OF 7)

This Figure applies only to: Group 1, Configuration 1-2; Group 3, Configuration 1-2.

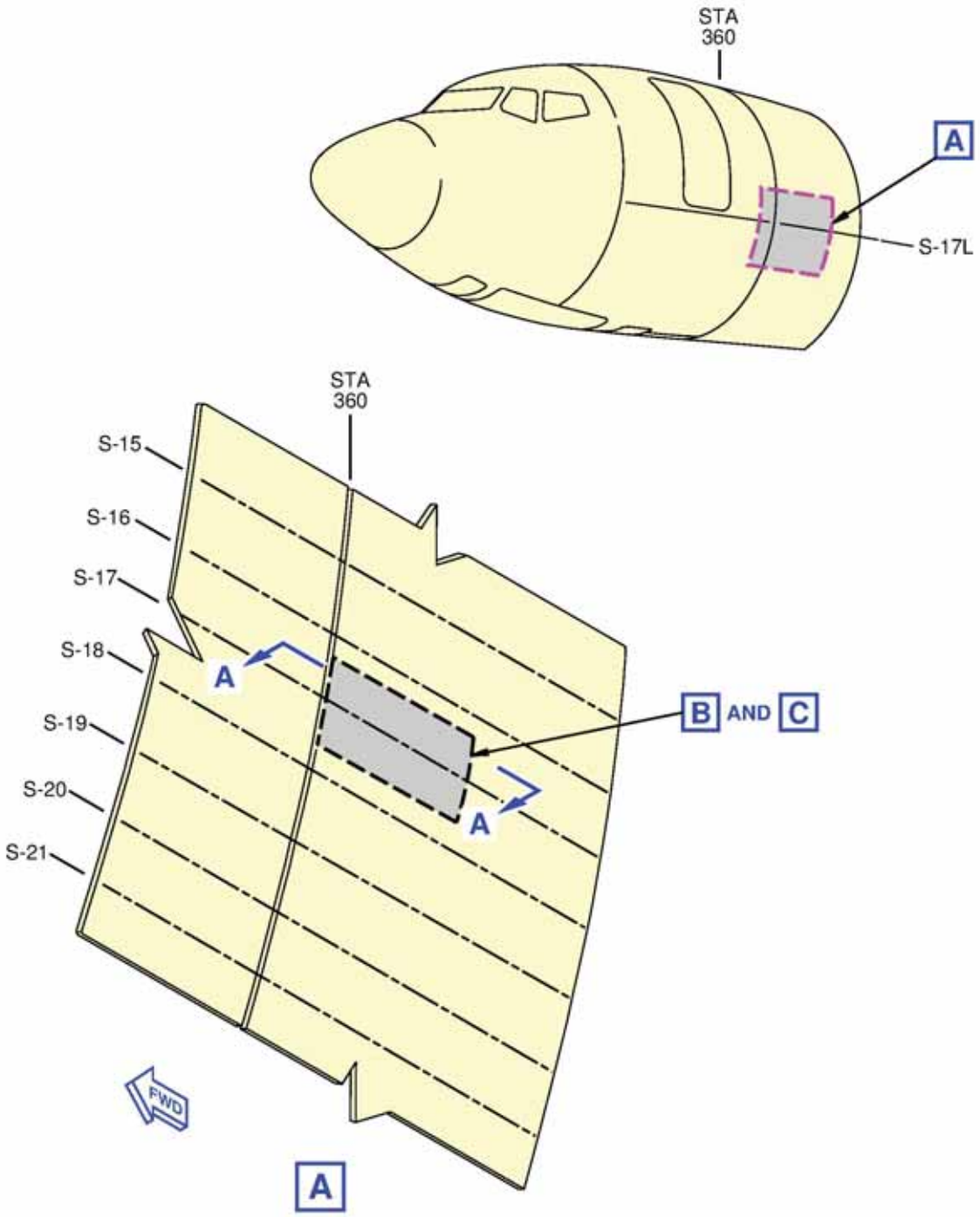

FIGURE 6: SKIN REPAIR AT ZONE 1
(SHEET 1 OF 9)

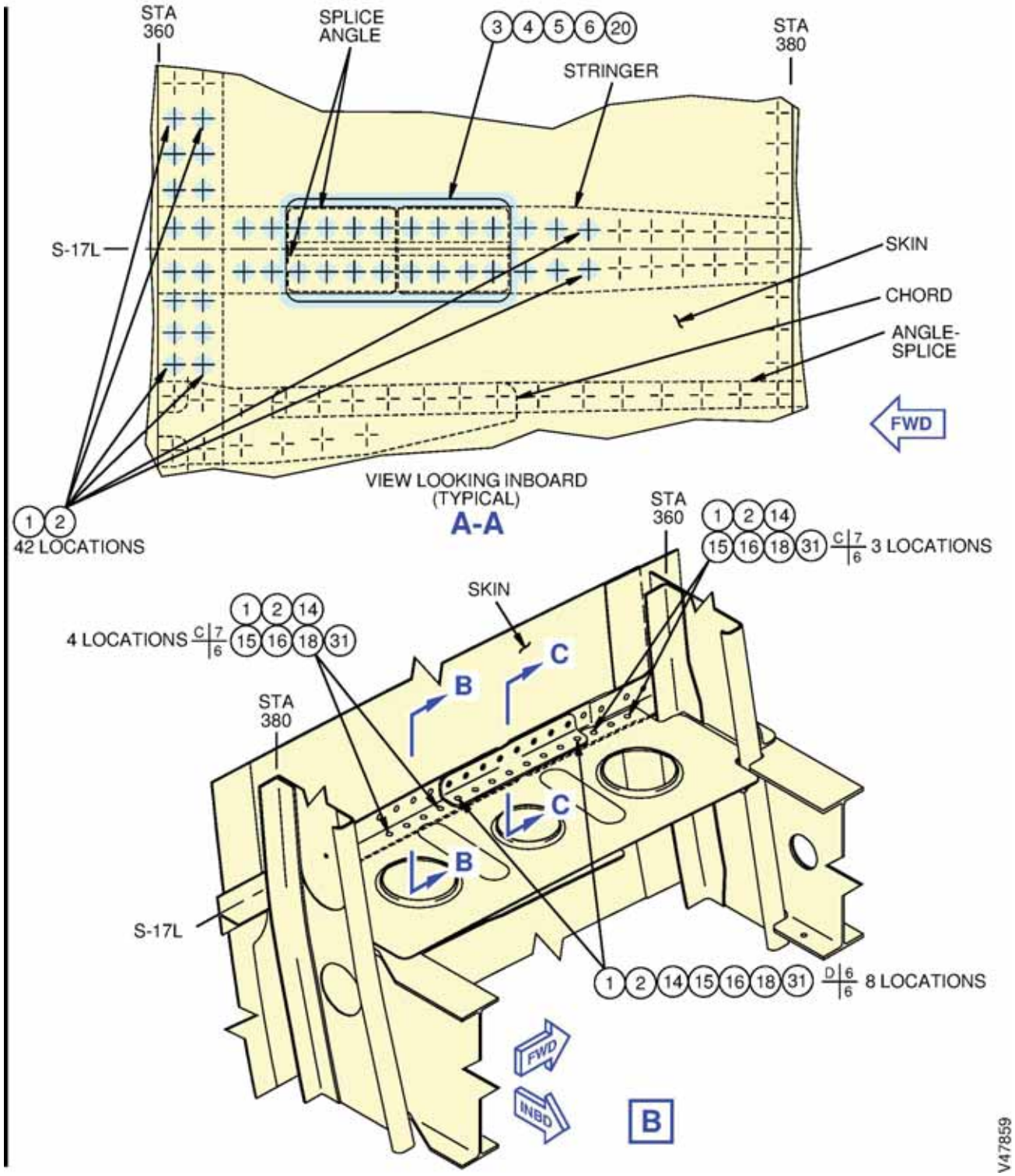

FIGURE 6: SKIN REPAIR AT ZONE 1
(SHEET 2 OF 9)

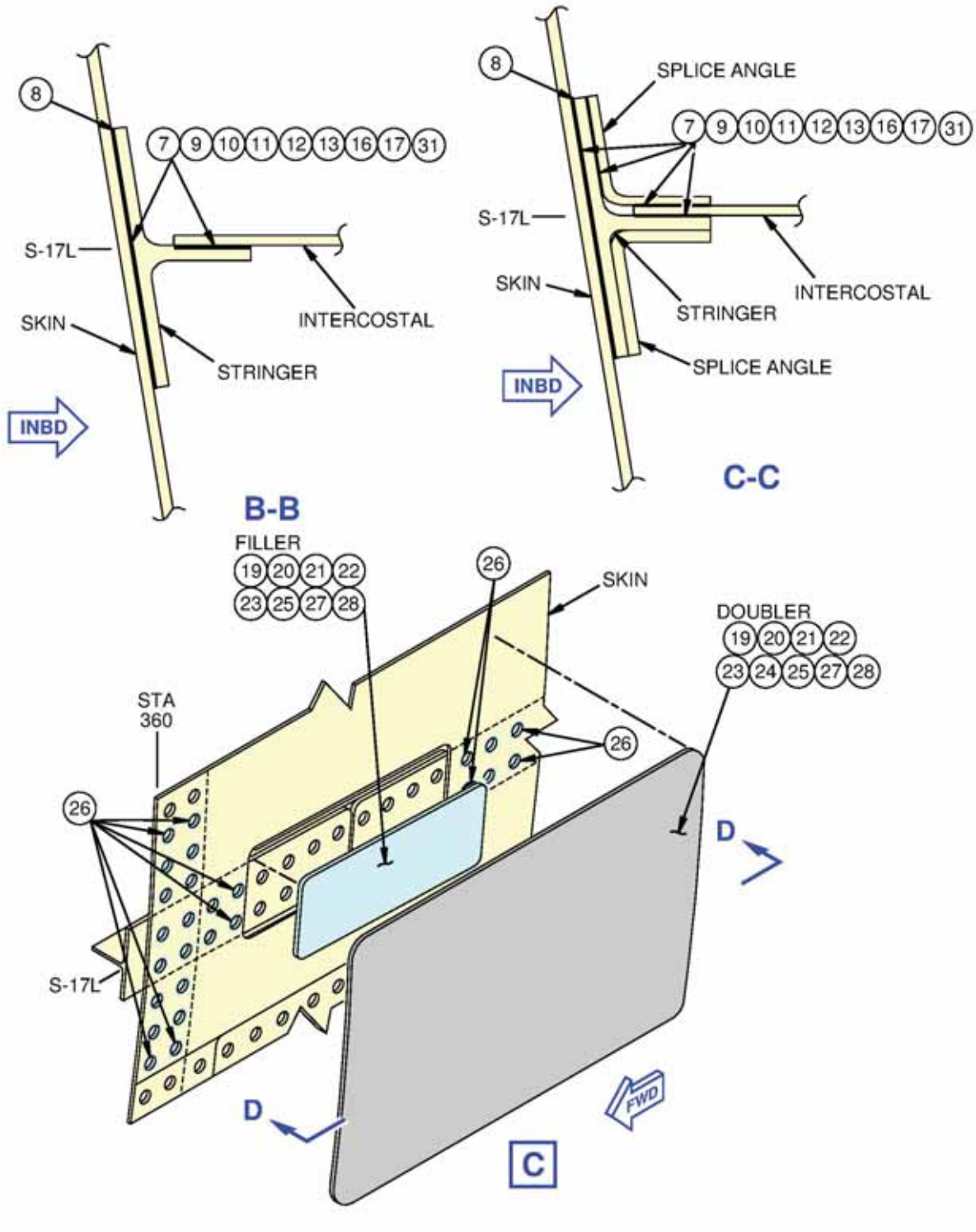

FIGURE 6: SKIN REPAIR AT ZONE 1
(SHEET 3 OF 9)

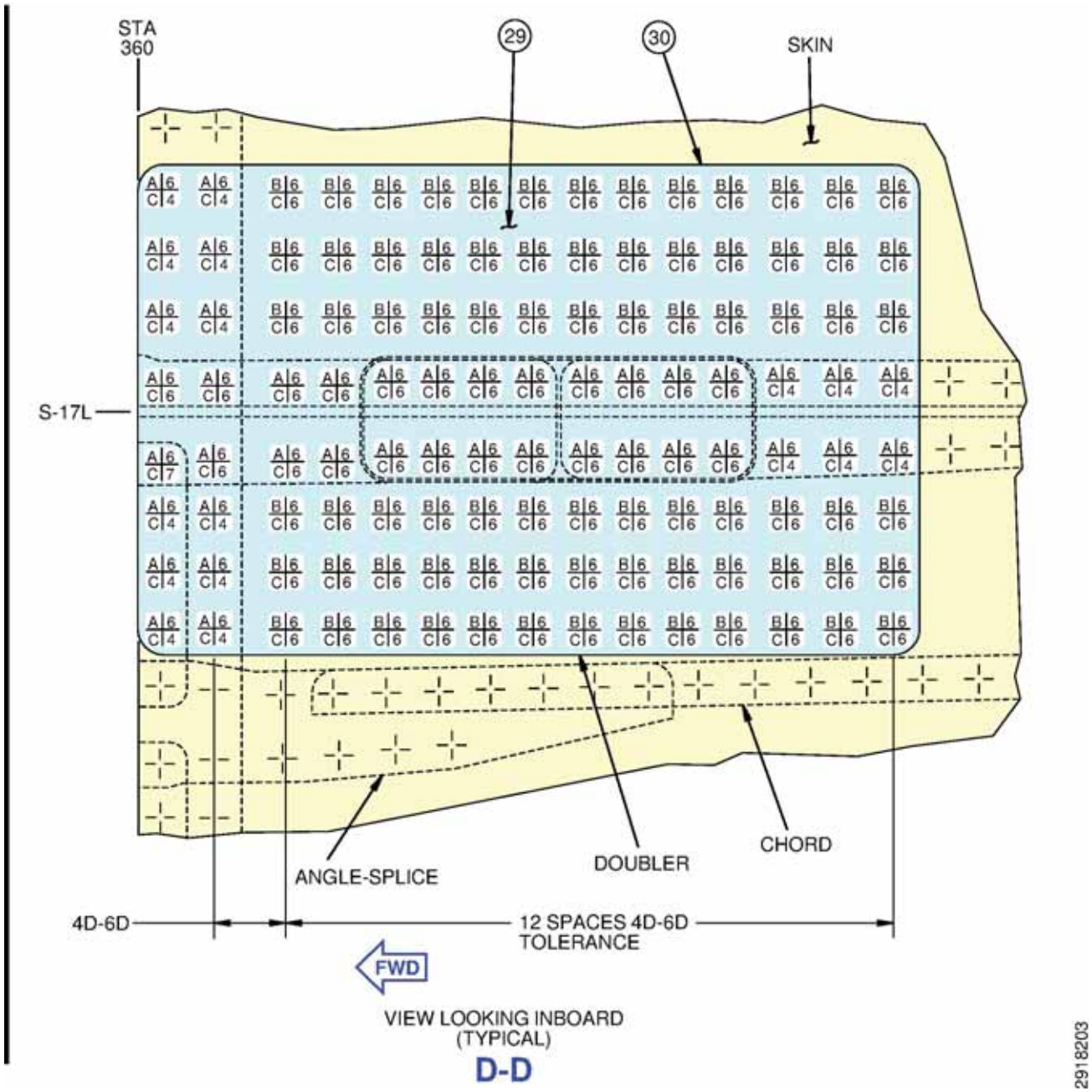

FIGURE 6: SKIN REPAIR AT ZONE 1 (SHEET 4 OF 9)

ALERT ALERT

CAUTION

MAKE SURE STRINGER S-17 IS NOT CUT OR DAMAGED WHEN CUTTING AND REMOVING THE CRACKED SKIN.

The step numbers shown below agree with the numbers shown in the circle symbols in the figure. The QTY numbers shown below are the number of parts necessary for this figure.

Step	Task	Name	Identification	Qty	More Data
1	Remove	FASTENERS	-	57	(a)
2	Inspect	EXISTING FASTENER HOLES	-	57	(b)(c)
3	Cut	SKIN	STRINGER S-17	-	(d)
4	Inspect	SKIN	STRINGER S-17	-	(e)
5	Cut	SKIN	STRINGER S-17	-	(f)
6	Deburr	SKIN	STRINGER S-17	-	(aa)(x)
7	Remove	SEALANT	STRINGER FLANGE	-	(h)
8	Measure	GAP	-	-	(i)(j)
9	Make	SHIM/TAPERED FILLER	-	-	(k)(aa)
10	Apply	CHEMICAL CONVERSION COATING	TYPE II, CLASS A	-	(l)
	Apply	PRIMER	BMS 10-11, TYPE I	-	(m)
11	Align	SHIM/TAPERED FILLER	-	-	-
12	Drill	SHIM/TAPERED FILLER	-	-	(n)(ag)
13	Remove	SHIM/TAPERED FILLER	-	-	-
14	Clean/Deburr	SHIM/TAPERED FILLER	-	-	(aa)
15	Clean	SKIN, STRINGER, SPLICE ANGLE, INTERCOSTAL	-	-	(ae)
16	Apply	SEALANT	BMS 5-95	-	(o)
17	Align	SHIM/TAPERED FILLER	-	-	(ad)
18	Install (New)	FASTENERS	-	15	(p)

FIGURE 6: SKIN REPAIR AT ZONE 1 (SHEET 5 OF 9)

Step	Task	Name	Identification	Qty	More Data
19	Make	FILLER	-	1	(q)(r)(t)(aa)(x)
	Make	DOUBLER	-	1	(q)(s)(t)(u)(x)(aa)
20	Apply	CHEMICAL CONVERSION COATING	TYPE II, CLASS A	-	(l)
	Apply	PRIMER	BMS 10-11, TYPE I	-	(m)
21	Align	FILLER	-	1	(v)
	Align	DOUBLER	-	1	-
22	Drill	DOUBLER/FILLER	-	-	(y)(ag)
	Drill	DOUBLER	-	-	(ag)(ai)
23	Remove	DOUBLER/FILLER	-	-	
24	Countersink	DOUBLER	-	-	(g)
25	Deburr	DOUBLER/FILLER	-	-	(aa)
	Deburr	SKIN	-	-	-
26	Install (New)	REPAIR WASHER	-	26	(w)
27	Apply	SEALANT	BMS 5-95	-	(ac)
	Apply	SEALANT	BMS 5-95	-	(ab)
28	Align	FILLER	-	1	(ad)
	Align	DOUBLER	-	1	(ad)
29	Install (New)	FASTENERS	-	120	(p)(ah)
30	Apply	SEALANT	-	-	(z)
31	Apply	CORROSION INHIBITING COMPOUND	BMS 3-23, TYPE II, CLASS 2	-	(aj)

(a) Remove the fasteners as shown. Refer to 737-600 SRM 51-40-02, 737-700 SRM 51-40-02, or 737-800 SRM 51-40-02 as an accepted procedure.

(b) Do a High Frequency Eddy Current (HFEC) inspection of the countersunk surface at fastener holes for any crack. Inspect in accordance with 737 NDT Manual Part 6, 53-30-00, Procedure 1 (Meter Display), or 737 NDT Manual Part 6, 53-30-00, Procedure 3 (Rotary Probe), or 737 NDT Manual Part 6, 53-30-00, Procedure 4 (Impedance Plane Display).

(c) Do an open hole HFEC inspection of the fastener holes for any crack. Inspect all fastener holes in accordance with 737 NDT Manual Part 6, 51-00-00, Procedure 16.

(d) Cut the cracked fuselage skin common to S-17L. Maintain a minimum of 2D spacing to the centerline of existing fastener locations and cut all internal radii to 0.5 inches.

(e) Do a HFEC Inspection along the edge of the cutout for any crack. Inspect cutout edge in accordance with 737 NDT Manual Part 6, 51-00-00, Procedure 4 (Meter Display), 737 NDT Manual Part 6, 51-00-00, Procedure 23 (Impedance Display).

FIGURE 6: SKIN REPAIR AT ZONE 1
(SHEET 6 OF 9)

Step	Task	Name	Identification	Qty	More Data
(f)	Make sure there are no cracks along the edge of the cutout and then do an insurance cut of 0.04 inch.				
(g)	Countersink all fastener holes on the repair doubler. Refer to 737-600 SRM 51-40-08, 737-700 SRM 51-40-08, or 737-800 SRM 51-40-08 as an accepted procedure.				
(h)	Remove sealant and make sure to take caution not to scratch or create any tool marks on the faying surface of mating parts. Refer to SOPM 20-50-19 as an accepted procedure.				
(i)	Measure the gap between the stringer flange and the fuselage skin. Measure gap between splice angle and stringer flange. If any gap is more than 0.050 inches, contact The Boeing Company for repair instructions and do the repair.				
(j)	Measure the gap between the stringer flange and the intercostal. Measure gap between splice angle and intercostal. If any gap is more than 0.050 inches, contact The Boeing Company for repair instructions and do the repair.				
(k)	Make shim/tapered filler from 2024-T3 Clad sheet per QQ-A-250/5. Size the shim/tapered filler to match the gap so that pull up prior to fastener installation does not exceed 0.010 inches.				
(l)	Apply chemical conversion coating to all bare surfaces of the repair parts and existing structure. Omit coating in fastener holes. Refer to SOPM 20-43-03 as an accepted procedure.				
(m)	Apply two layers of BMS 10-11 Type I primer to all unprimed surfaces of the repair parts and existing structure. Omit coating in fastener holes. Refer to SOPM 20-41-02 as an accepted procedure.				
(n)	Temporarily position shim/tapered filler firmly against the adjacent structure, then backdrill existing fastener holes through the shim/tapered filler. Refer to fastener code table for final hole size. Refer to 737-600 SRM 51-10-02, 737-700 SRM 51-10-02, or 737-800 SRM 51-10-02 as an accepted procedure.				
(o)	Apply BMS 5-95 sealant to all mating surfaces of the shim/tapered filler. Refer to SOPM 20-50-19 as an accepted procedure.				
(p)	Refer to fastener code table for installation of fasteners. Refer to 737-600 SRM 51-40-02, 737-700 SRM 51-40-02, or 737-800 SRM 51-40-02 as an accepted procedure.				
(q)	Make filler and doubler from 2024-T3 clad sheet QQ-A-250/5.				
(r)	Size the filler to maintain a maximum of 0.050 inch gap on all sides to the existing skin with external radii of 0.5 inch and a thickness of 0.071 inches.				
(s)	Size the doubler to maintain 0.5 inch edge margin for the outermost rows of fasteners and cut all external radii of 0.5 inch.				
(t)	Contour to match the area, pre-form to match the contour of the fuselage. Refer to 737-600 SRM 51-30-01, 737-700 SRM 51-30-01, or 737-800 SRM 51-30-01 prior to fastener installation.				
(u)	Make doubler thickness 0.08 inches and chamfer all edges in accordance with 737-600 SRM 51-10-01, 737-700 SRM 51-10-01, or 737-800 SRM 51-10-01 for aerodynamic smoothness.				
(v)	Align all sides of the filler so the maximum gap between the filler and existing skin does not exceed 0.050 inches.				
(w)	Manufacture repair washers in accordance with 737-600 SRM 51-40-08, 737-700 SRM 51-40-08, or 737-800 SRM 51-40-08, and install repair washers in existing fastener locations.				

FIGURE 6: SKIN REPAIR AT ZONE 1
(SHEET 7 OF 9)

Step	Task	Name	Identification	Qty	More Data
(x) Maintain a surface roughness of 63 microinches RA. Refer to 737-600 SRM 51-20-13, 737-700 SRM 51-20-13, or 737-800 SRM 51-20-13 as an accepted procedure.					
(y) As an acceptable procedure: 1) Temporarily position the filler firmly against the adjacent structure. 2) Backdrill the existing fastener locations through the filler. 3) Remove the temporary fasteners in order to position the doubler firmly against the adjacent structure. 4) Backdrill existing fastener locations through the stackup to the doubler. Refer to the fastener code table for final hole size. Refer to 737-600 SRM 51-10-02, 737-700 SRM 51-10-02, or 737-800 SRM 51-10-02 as an accepted procedure.					
(z) Edge fillet seal around the entire outer edge of the doubler. Edge fillet seal around entire periphery of internal structure affected by this repair. Refer to SOPM 20-50-19 as an accepted procedure.					
(aa) Break all sharp edges.					
(ab) Apply BMS 5-95 sealant to all mating surfaces of repair parts and existing structure. Refer to SOPM 20-50-19 as an accepted procedure.					
(ac) Fill the gap around the filler with BMS 5-95.					
(ad) Install temporary hardware to clamp repair part with structure for sealant squeeze out. Make sure fastener holes are aligned. Allow sealant to cure before removing temporary hardware. Refer to SOPM 20-50-19 as an accepted procedure.					
(ae) Remove all debris from faying surfaces. Deburr accessible hole edges. Take caution not to scratch or create any tool marks on the surface of mating parts.					
(af) Clean up excess sealant internally to the filler. Refer to SOPM 20-50-19 as an accepted procedure.					
(ag) Install temporary fasteners to tightly clamp the structure as drilling progresses to prevent debris from getting into voids between part surfaces. Use newly sharpened drills and reamers. Deburr accessible hole edges. Refer to 737-600 SRM 51-10-02, 737-700 SRM 51-10-02, or 737-800 SRM 51-10-02 as an accepted procedure.					
(ah) Install all rivets dry. Ensure fastener holes are free of sealant and/or contamination before rivet installation.					
(ai) Layout and drill fastener holes. Maintain 4D-6D fastener spacing.					
(aj) Apply Corrosion Inhibiting Compound (CIC) to the internal area of work. Refer to SOPM 20-41-05 as an accepted procedure.					

FIGURE 6: SKIN REPAIR AT ZONE 1
(SHEET 8 OF 9)

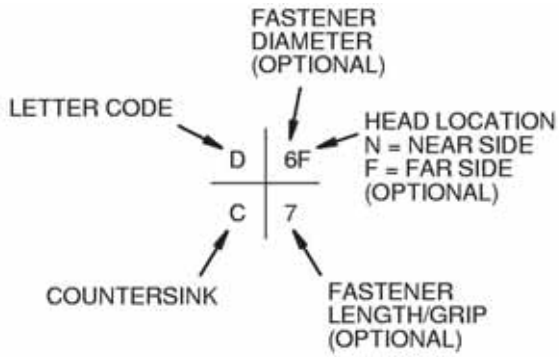

EXAMPLE OF FASTENER SYMBOL

The codes shown below agree with the letter shown in the upper left corner of the fastener symbols in the figure. A number in the lower right corner gives the grip length of the fastener. The QTY numbers shown below are the number of fasteners necessary for this figure.

Code	Name	Identification	Qty	Hole Dia	More Data
A	BOLT	BACB30NW6K( )Y	42	0.216 - 0.219	(a)(b)(c)(d)
	COLLAR	BACC30R6	42	-	-
B	RIVET	BACR15GF6D	78	0.190 - 0.196	(a)(b)
C	RIVET	BACR15ET7D( )	7	0.225 - 0.231	(b)(d)
D	BOLT	BACB30NX6K( )Y	8	0.216 - 0.219	(b)(c)
	COLLAR	BACC30R6	8	-	-
(a) 100 deg. countersink head.					
(b) Install fasteners. Refer to 737-600 SRM 51-40-02, 737-700 SRM 51-40-02, or 737-800 SRM 51-40-02 as an accepted procedure.					
(c) Install fasteners wet with BMS 5-95. Refer to 737-600 SRM 51-20-05, 737-700 SRM 51-20-05, or 737-800 SRM 51-20-05 as an accepted procedure.					
(d) If more fasteners were required for removal, install this fastener type at the location required.					

FIGURE 6: SKIN REPAIR AT ZONE 1
(SHEET 9 OF 9)

This Figure applies only to: Group 1, Configuration 1-2.

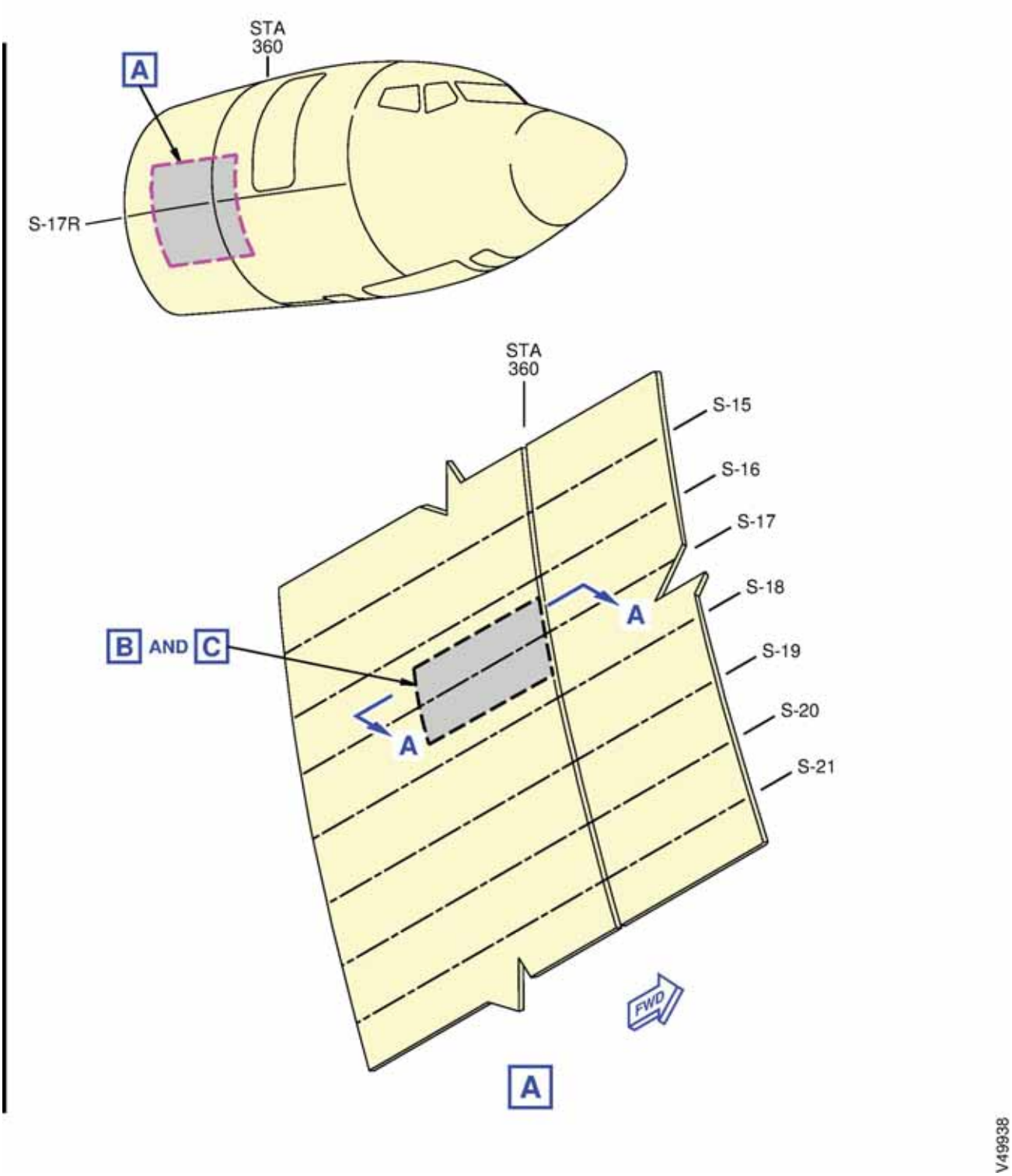

FIGURE 7: SKIN REPAIR AT ZONE 2
(SHEET 1 OF 9)

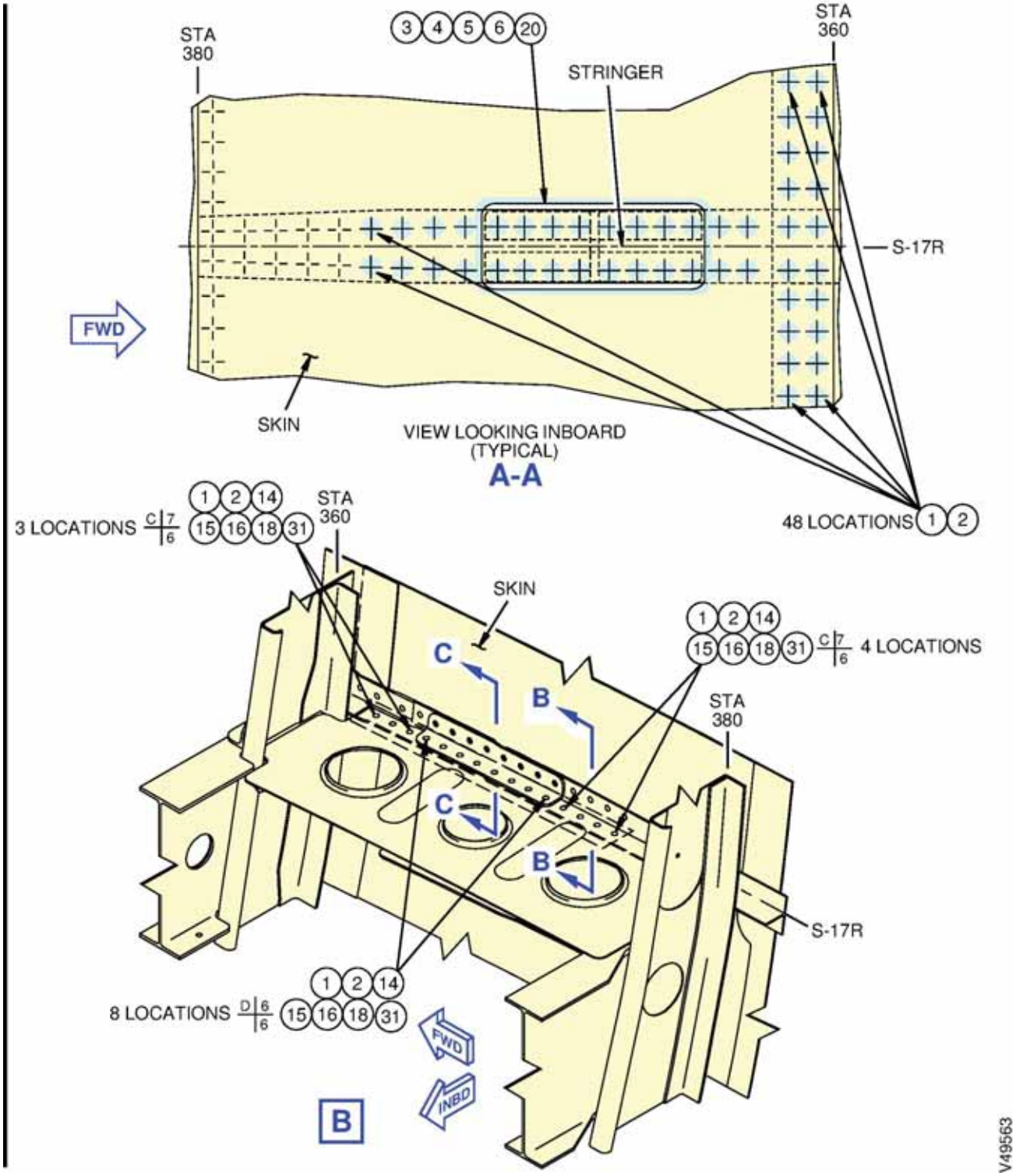

FIGURE 7: SKIN REPAIR AT ZONE 2
(SHEET 2 OF 9)

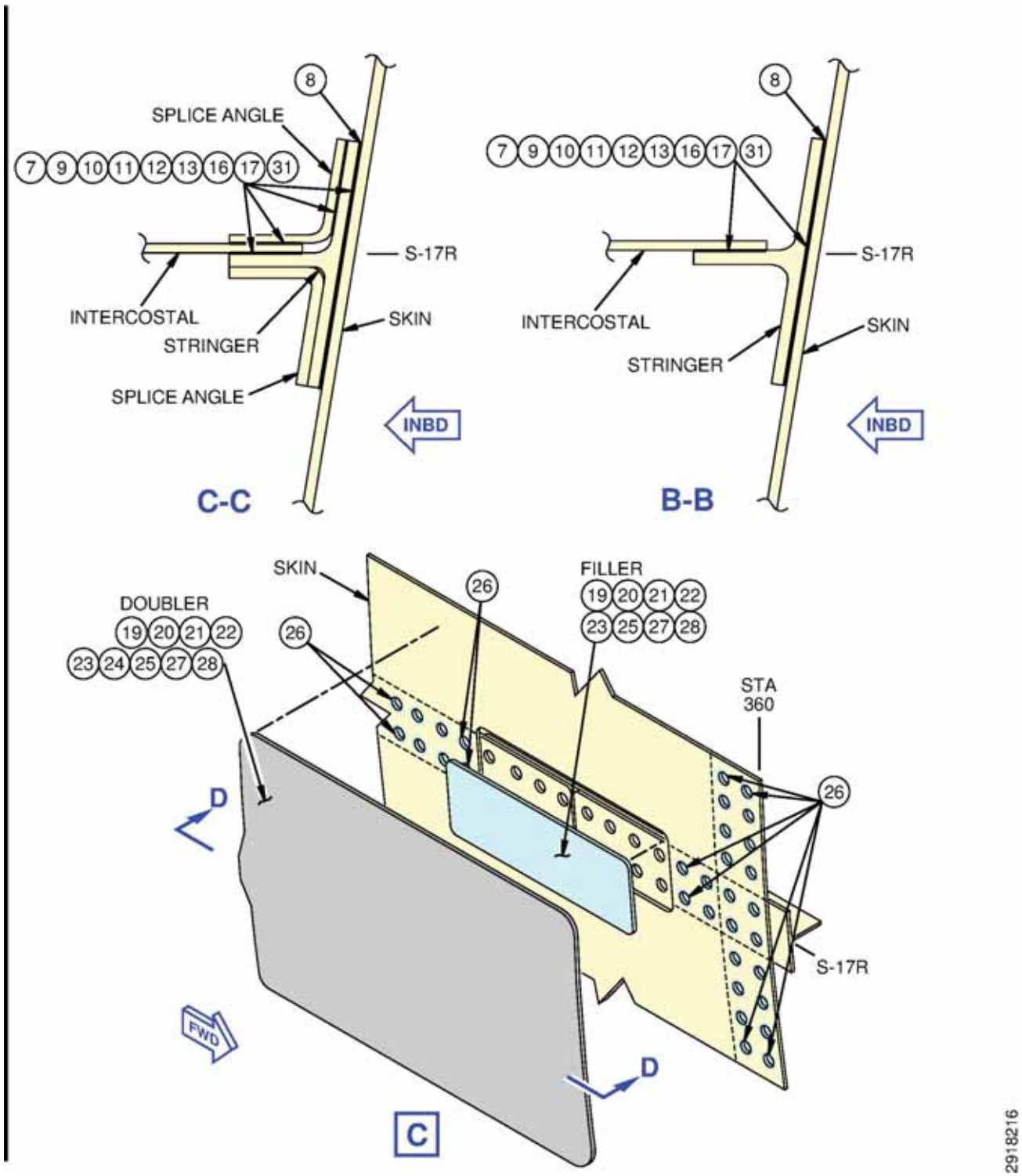

FIGURE 7: SKIN REPAIR AT ZONE 2
(SHEET 3 OF 9)

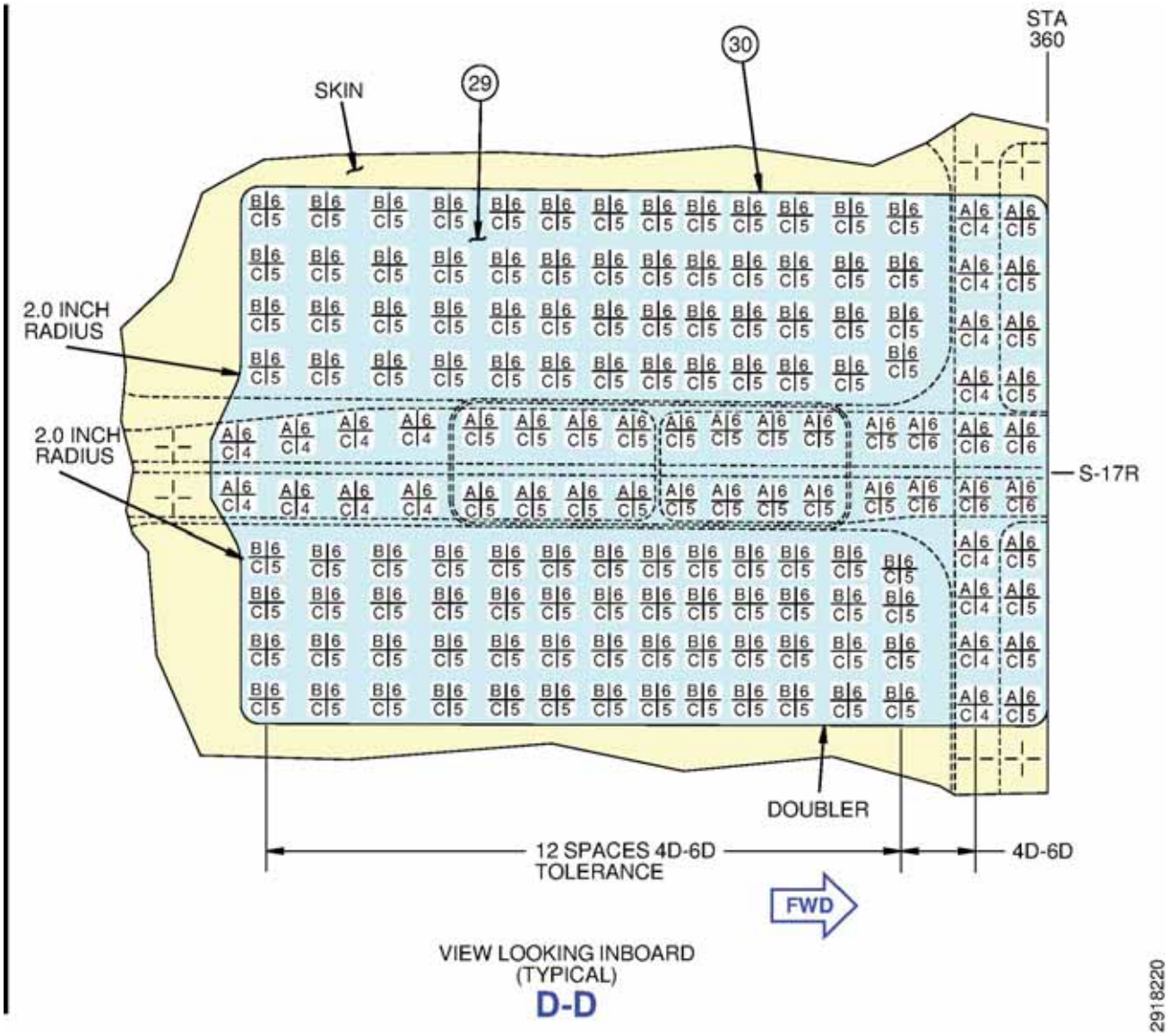

CAUTION

MAKE SURE STRINGER S-17 IS NOT CUT OR DAMAGED WHEN CUTTING AND REMOVING THE CRACKED SKIN.

The step numbers shown below agree with the numbers shown in the circle symbols in the figure. The QTY numbers shown below are the number of parts necessary for this figure.

Step	Task	Name	Identification	Qty	More Data
1	Remove	FASTENERS	-	63	(a)
2	Inspect	EXISTING FASTENER HOLES	-	63	(b)(c)

FIGURE 7: SKIN REPAIR AT ZONE 2 (SHEET 4 OF 9)

Step	Task	Name	Identification	Qty	More Data
3	Cut	SKIN	STRINGER S-17	-	(d)
4	Inspect	SKIN	STRINGER S-17	-	(e)
5	Cut	SKIN	STRINGER S-17	-	(f)
6	Deburr	SKIN	STRINGER S-17	-	(ab)(x)
7	Remove	SEALANT	STRINGER FLANGE	-	(h)
8	Measure	GAP	-	-	(i)(j)
9	Make	SHIM/TAPERED FILLER	-	-	(k)(ab)
10	Apply	CHEMICAL CONVERSION COATING	TYPE II, CLASS A	-	(l)
	Apply	PRIMER	BMS 10-11, TYPE I	-	(m)
11	Align	SHIM/TAPERED FILLER	-	-	-
12	Drill	SHIM/TAPERED FILLER	-	-	(n)(ah)
13	Remove	SHIM/TAPERED FILLER	-	-	-
14	Clean/Deburr	SHIM/TAPERED FILLER	-	-	(ab)
15	Clean	SKIN, STRINGER, SPLICE ANGLE, INTERCOSTAL	-	-	(af)
16	Apply	SEALANT	BMS 5-95	-	(o)
17	Align	SHIM/TAPERED FILLER	-	-	(ae)
18	Install (New)	FASTENERS	-	15	(p)
19	Make	FILLER	-	1	(q)(r)(t)(ab)(x)
	Make	DOUBLER	-	1	(q)(s)(t)(u)(x)(ab)
20	Apply	CHEMICAL CONVERSION COATING	TYPE II, CLASS A	-	(l)
	Apply	PRIMER	BMS 10-11, TYPE I	-	(m)
21	Align	FILLER	-	1	(v)
	Align	DOUBLER	-	1	-
22	Drill	DOUBLER/FILLER	-	-	(y)(ah)
	Drill	DOUBLER	-	-	(ah)(aj)(z)

FIGURE 7: SKIN REPAIR AT ZONE 2
(SHEET 5 OF 9)

Step	Task	Name	Identification	Qty	More Data
23	Remove	DOUBLER/FILLER	-	-	-
24	Countersink	DOUBLER	-	-	(g)
25	Deburr	DOUBLER/FILLER	-	-	(ab)
	Deburr	SKIN	-	-	-
26	Install (New)	REPAIR WASHER	-	32	(w)
27	Apply	SEALANT	BMS 5-95	-	(ad)
	Apply	SEALANT	BMS 5-95	-	(ac)
28	Align	FILLER	-	1	(ae)
	Align	DOUBLER	-	1	(ae)
29	Install (New)	FASTENERS	-	152	(p)(ai)
30	Apply	SEALANT	BMS 5-95	-	(aa)
31	Apply	CORROSION INHIBITING COMPOUND	BMS 3-23, TYPE II, CLASS 2	-	(ak)

(a) Remove the fasteners as shown. Refer to 737-700 SRM 51-40-02, or 737-800 SRM 51-40-02 as an accepted procedure.

(b) Do a High Frequency Eddy Current (HFEC) inspection of the countersunk surface at fastener holes for any crack. Inspect in accordance with 737 NDT Manual Part 6, 53-30-00, Procedure 1 (Meter Display), or 737 NDT Manual Part 6, 53-30-00, Procedure 3 (Rotary Probe), or 737 NDT Manual Part 6, 53-30-00, Procedure 4 (Impedance Plane Display).

(c) Do an open hole HFEC inspection of the fastener holes for any crack. Inspect all fastener holes in accordance with 737 NDT Manual Part 6, 51-00-00, Procedure 16.

(d) Cut the cracked fuselage skin common to S-17R Maintain a minimum of 2D spacing to the centerline of existing fastener locations and cut all internal radii to 0.5 inches.

(e) Do a HFEC Inspection along the edge of the cutout for any crack. Inspect cutout edge in accordance with 737 NDT Manual Part 6, 51-00-00, Procedure 4 (Meter Display), 737 NDT Manual Part 6, 51-00-00, Procedure 23 (Impedance Display).

(f) Make sure there are no cracks along the edge of the cutout and then do an insurance cut of 0.04 inch.

(g) Countersink all fastener holes on the repair doubler. Refer to 737-700 SRM 51-40-08, or 737-800 SRM 51-40-08 as an accepted procedure.

(h) Remove sealant and make sure to take caution not to scratch or create any tool marks on the faying surface of mating parts. Refer to SOPM 20-50-19 as an accepted procedure.

(i) Measure the gap between the stringer flange and the fuselage skin. Measure gap between splice angle and stringer flange. If any gap is more than 0.050 inches, contact The Boeing Company for repair instructions and do the repair.

(j) Measure the gap between the stringer flange and the intercostal. Measure gap between splice angle and intercostal. If any gap is more than 0.050 inches, contact The Boeing Company for repair instructions and do the repair.

FIGURE 7: SKIN REPAIR AT ZONE 2
(SHEET 6 OF 9)

Step	Task	Name	Identification	Qty	More Data
(k)	Make shim/tapered filler from 2024-T3 Clad sheet per QQ-A-250/5. Size the shim/tapered filler to match the gap so that pull up prior to fastener installation does not exceed 0.010 inches.				
(l)	Apply chemical conversion coating to all bare surfaces of the repair parts and existing structure. Omit coating in fastener holes. Refer to SOPM 20-43-03 as an accepted procedure.				
(m)	Apply two layers of BMS 10-11 Type I primer to all unprimed surfaces of the repair parts and existing structure. Omit coating in fastener holes. Refer to SOPM 20-41-02 as an accepted procedure.				
(n)	Temporarily position shim/tapered filler firmly against the adjacent structure, then backdrill existing fastener holes through the shim/tapered filler. Refer to fastener code table for final hole size. Refer to 737-700 SRM 51-10-02, or 737-800 SRM 51-10-02 as an accepted procedure.				
(o)	Apply BMS 5-95 sealant to all mating surfaces of the shim/tapered filler. Refer to SOPM 20-50-19 as an accepted procedure. Refer to SOPM 20-50-19 as an accepted procedure.				
(p)	Refer to fastener code table for installation of fasteners. Refer to 737-700 SRM 51-40-02, or 737-800 SRM 51-40-02 as an accepted procedure.				
(q)	Make filler and doubler from 2024-T3 clad sheet QQ-A-250/5.				
(r)	Size the filler to maintain a maximum of 0.050 inch gap on all sides to the existing skin with external radii of 0.5 inch and a thickness of 0.063 inches.				
(s)	Size the doubler to maintain 0.5 inch edge margin for the outermost rows of fasteners and cut all external radii of 0.5 inch.				
(t)	Contour to match the area, pre-form to match the contour of the fuselage. Refer to 737-700 SRM 51-30-01, or 737-800 SRM 51-30-01 prior to fastener installation.				
(u)	Make doubler thickness 0.063 inches and chamfer all edges in accordance with 737-700 SRM 51-10-01, or 737-800 SRM 51-10-01 for aerodynamic smoothness.				
(v)	Align all sides of the filler so the maximum gap between the filler and existing skin does not exceed 0.050 inches.				
(w)	Manufacture repair washers in accordance with 737-700 SRM 51-40-08, or 737-800 SRM 51-40-08, and install repair washers in existing fastener locations.				
(x)	Maintain a surface roughness of 63 microinches RA. Refer to 737-700 SRM 51-20-13, or 737-800 SRM 51-20-13 as an accepted procedure.				
(y)	As an acceptable procedure: 1) Temporarily position the filler firmly against the adjacent structure. 2) Backdrill the existing fastener locations through the filler. 3) Remove the temporary fasteners in order to position the doubler firmly against the adjacent structure. 4) Backdrill existing fastener locations through the stackup to the doubler. Refer to the fastener code table for final hole size. Refer to 737-700 SRM 51-10-02, or 737-800 SRM 51-10-02 as an accepted procedure.				

FIGURE 7: SKIN REPAIR AT ZONE 2
(SHEET 7 OF 9)

Step	Task	Name	Identification	Qty	More Data
(z) The driven rivet button must not ride the chem-milled radius. The edge of the hole must not be in the chem-milled radius.					
(aa) Edge fillet seal around the entire outer edge of the doubler. Edge fillet seal around entire periphery of internal structure affected by this repair. Refer to SOPM 20-50-19 as an accepted procedure.					
(ab) Break all sharp edges.					
(ac) Apply BMS 5-95 sealant to all mating surfaces of repair parts and existing structure. Refer to SOPM 20-50-19 as an accepted procedure.					
(ad) Fill the gap around the filler with BMS 5-95.					
(ae) Install temporary hardware to clamp repair part with structure for sealant squeeze out. Make sure fastener holes are aligned. Allow sealant to cure before removing temporary hardware. Refer to SOPM 20-50-19 as an accepted procedure.					
(af) Remove all debris from faying surfaces. Deburr accessible hole edges. Take caution not to scratch or create any tool marks on the surface of mating parts.					
(ag) Clean up excess sealant internally to the filler. Refer to SOPM 20-50-19 as an accepted procedure.					
(ah) Install temporary fasteners to tightly clamp the structure as drilling progresses to prevent debris from getting into voids between part surfaces. Use newly sharpened drills and reamers. Deburr accessible hole edges. Refer to 737-700 SRM 51-10-02, or 737-800 SRM 51-10-02 as an accepted procedure.					
(ai) Install all rivets dry. Ensure fastener holes are free of sealant and/or contamination before rivet installation.					
(aj) Layout and drill fastener holes. Maintain 4D-6D fastener spacing.					
(ak) Apply Corrosion Inhibiting Compound (CIC) to the internal area of work. Refer to SOPM 20-41-05 as an accepted procedure.					

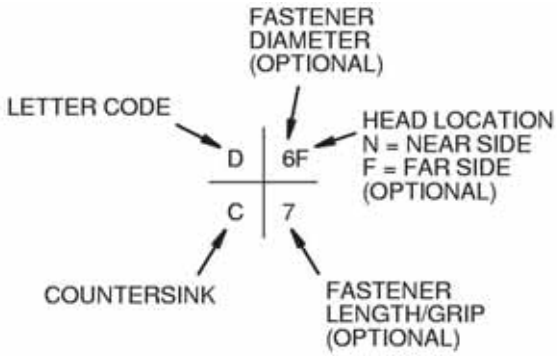

EXAMPLE OF FASTENER SYMBOL

2314995

FIGURE 7: SKIN REPAIR AT ZONE 2 (SHEET 8 OF 9)

ALERT **ALERT**

The codes shown below agree with the letter shown in the upper left corner of the fastener symbols in the figure. A number in the lower right corner gives the grip length of the fastener. The QTY numbers shown below are the number of fasteners necessary for this figure.

Code	Name	Identification	Qty	Hole Dia	More Data
A	BOLT	BACB30NW6K( )Y	48	0.216 - 0.219	(a)(b)(c)(d)
	COLLAR	BACC30R6	48	-	-
B	RIVET	BACR15GF6D	104	0.190 - 0.196	(a)(b)(e)
C	RIVET	BACR15ET7D( )	7	0.225 - 0.231	(b)(d)
D	BOLT	BACB30NX6K( )Y	8	0.216 - 0.219	(b)(c)
	COLLAR	BACC30R6	8	-	-

(a)	100 deg. countersink head.
(b)	Install fasteners. Refer to 737-700 SRM 51-40-02, or 737-800 SRM 51-40-02 as an accepted procedure.
(c)	Install fasteners wet with BMS 5-95. Refer to 737-700 SRM 51-20-05, or 737-800 SRM 51-20-05 as an accepted procedure.
(d)	If more fasteners were required for removal, install this fastener type at the location required.
(e)	Rivet must be overdriven to 1.5D minimum butt diameter. Refer to 737-700 SRM 51-40-02, or 737-800 SRM 51-40-02 as an accepted procedure.

FIGURE 7: SKIN REPAIR AT ZONE 2
(SHEET 9 OF 9)

This Figure applies only to: Group 1, Configuration 1-2; Group 2, Configuration 1-2; Group 3, Configuration 1-2.

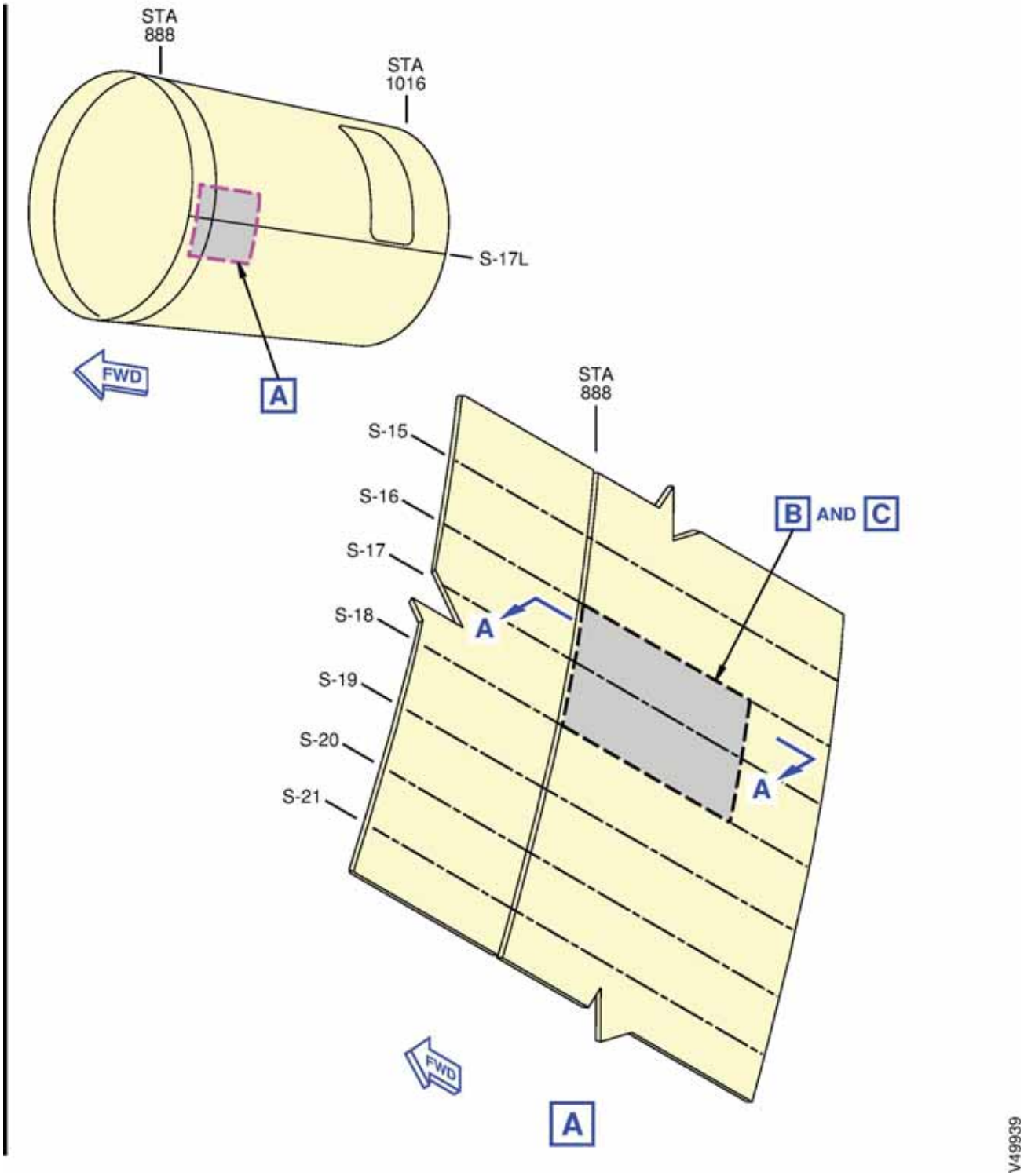

FIGURE 8: SKIN REPAIR AT ZONE 3
(SHEET 1 OF 9)

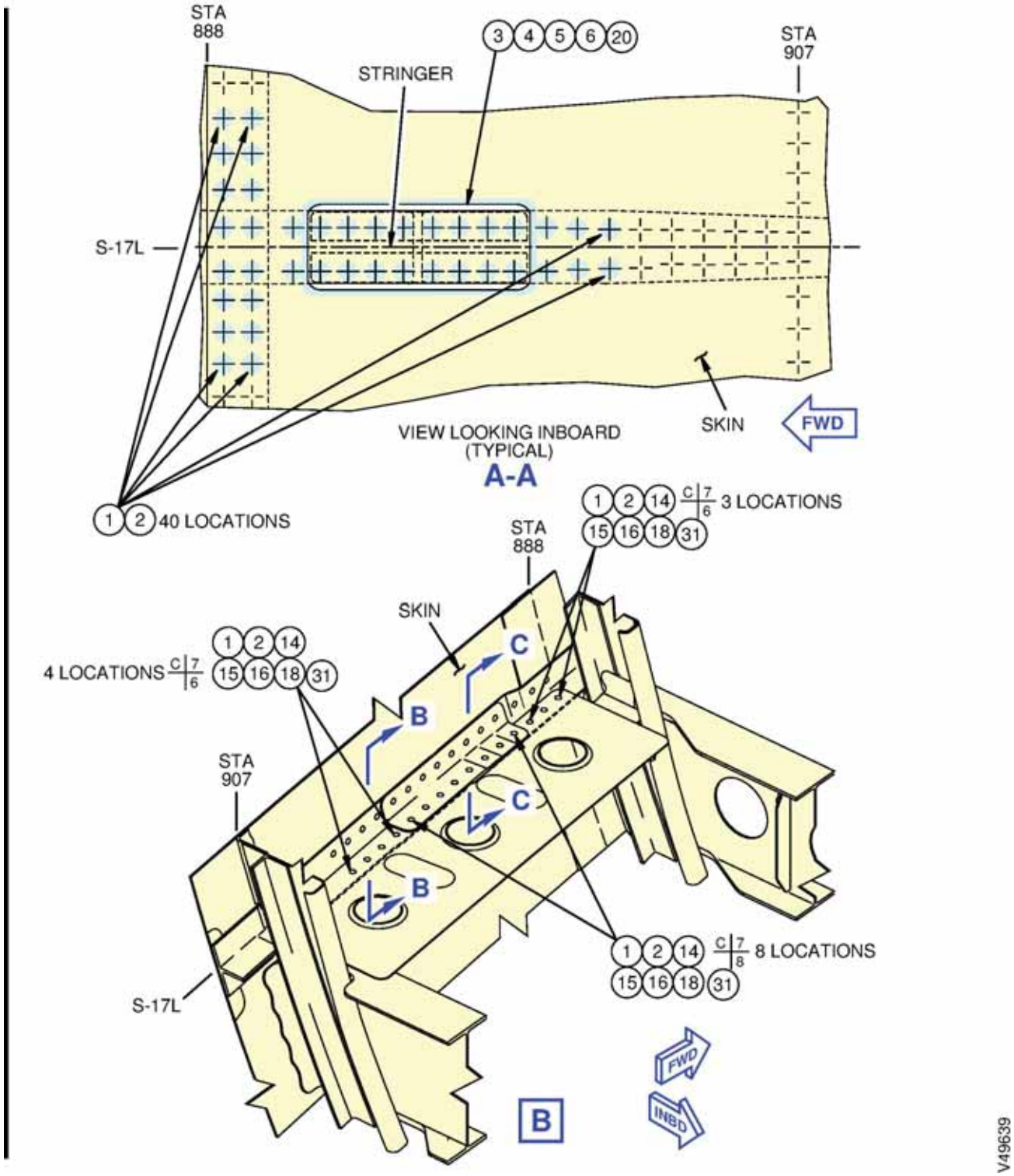

FIGURE 8: SKIN REPAIR AT ZONE 3
(SHEET 2 OF 9)

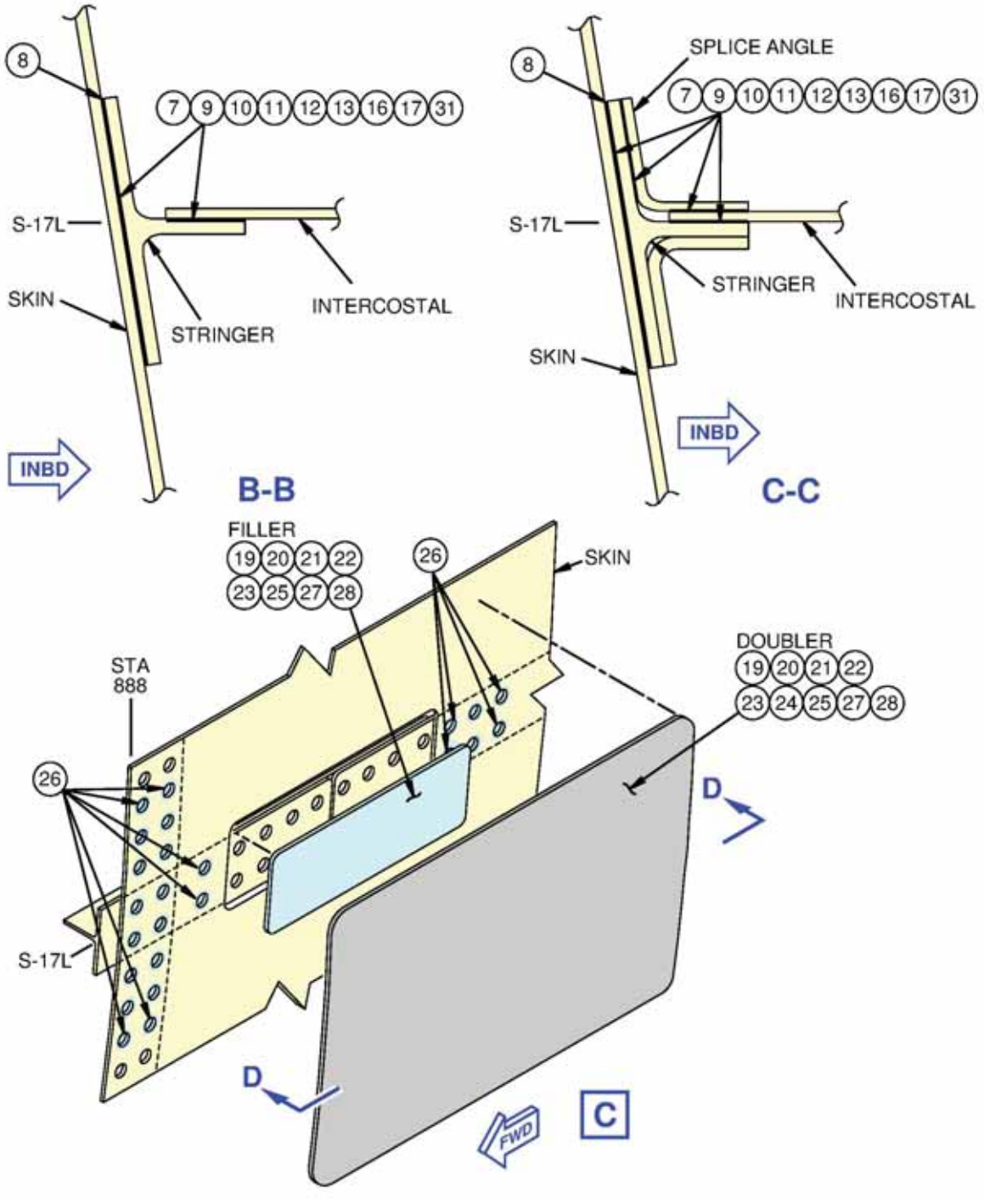

FIGURE 8: SKIN REPAIR AT ZONE 3
(SHEET 3 OF 9)

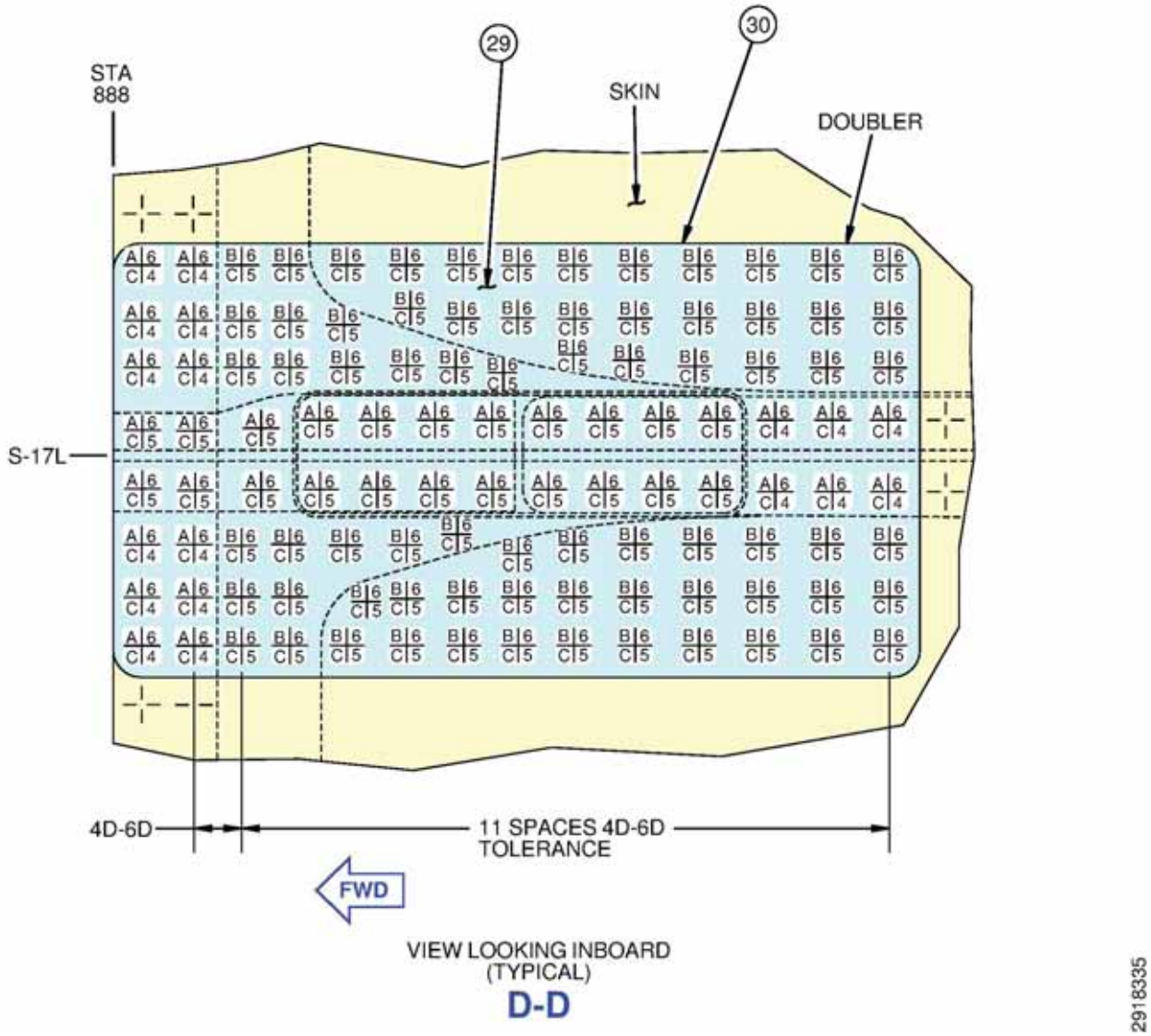

CAUTION MAKE SURE STRINGER S-17 IS NOT CUT OR DAMAGED WHEN CUTTING AND REMOVING THE CRACKED SKIN.

The step numbers shown below agree with the numbers shown in the circle symbols in the figure. The QTY numbers shown below are the number of parts necessary for this figure.

Step	Task	Name	Identification	Qty	More Data
1	Remove	FASTENERS	-	55	(a)
2	Inspect	EXISTING FASTENER HOLES	-	55	(b)(c)

FIGURE 8: SKIN REPAIR AT ZONE 3
(SHEET 4 OF 9)

Step	Task	Name	Identification	Qty	More Data
3	Cut	SKIN	STRINGER S-17	-	(d)
4	Inspect	SKIN	STRINGER S-17	-	(e)
5	Cut	SKIN	STRINGER S-17	-	(f)
6	Deburr	SKIN	STRINGER S-17	-	(ab)(x)
7	Remove	SEALANT	STRINGER FLANGE	-	(h)
8	Measure	GAP	-	-	(i)(j)
9	Make	SHIM/TAPERED FILLER	-	-	(k)(ab)
10	Apply	CHEMICAL CONVERSION COATING	TYPE II, CLASS A	-	(l)
	Apply	PRIMER	BMS 10-11, TYPE I	-	(m)
11	Align	SHIM/TAPERED FILLER	-	-	-
12	Drill	SHIM/TAPERED FILLER	-	-	(n)(ah)
13	Remove	SHIM/TAPERED FILLER	-	-	-
14	Clean/Deburr	SHIM/TAPERED FILLER	-	-	(ab)
15	Clean	SKIN, STRINGER, SPLICE ANGLE, INTERCOSTAL	-	-	(af)
16	Apply	SEALANT	BMS 5-95	-	(o)
17	Align	SHIM/TAPERED FILLER	-	-	(ae)
18	Install (New)	FASTENERS	-	15	(p)
19	Make	FILLER	-	1	(q)(r)(t)(ab)(x)
	Make	DOUBLER	-	1	(q)(s)(t)(u)(x)(ab)
20	Apply	CHEMICAL CONVERSION COATING	TYPE II, CLASS A	-	(l)
	Apply	PRIMER	BMS 10-11, TYPE I	-	(m)
21	Align	FILLER	-	1	(v)
	Align	DOUBLER	-	1	-
22	Drill	DOUBLER/FILLER	-	-	(y)(ah)
	Drill	DOUBLER	-	-	(ah)(aj)(z)

FIGURE 8: SKIN REPAIR AT ZONE 3
(SHEET 5 OF 9)

Step	Task	Name	Identification	Qty	More Data
23	Remove	DOUBLER/FILLER	-	-	-
24	Countersink	DOUBLER	-	-	(g)
25	Deburr	DOUBLER/FILLER	-	-	(ab)
	Deburr	SKIN	-	-	-
26	Install (New)	REPAIR WASHER	-	24	(w)
27	Apply	SEALANT	BMS 5-95	-	(ad)
	Apply	SEALANT	BMS 5-95	-	(ac)
28	Align	FILLER	-	1	(ae)
	Align	DOUBLER	-	1	(ae)
29	Install (New)	FASTENERS	-	112	(p)(ai)
30	Apply	SEALANT	BMS 5-95	-	(aa)
31	Apply	CORROSION INHIBITING COMPOUND	BMS 3-23, TYPE II, CLASS 2	-	(ak)

(a) Remove the fasteners as shown. Refer to 737-600 SRM 51-40-02, 737-700 SRM 51-40-02, 737-800 SRM 51-40-02, or 737-800BCF SRM 51-40-02 as an accepted procedure.

(b) Do a High Frequency Eddy Current (HFEC) inspection of the countersunk surface at fastener holes for any crack. Inspect in accordance with 737 NDT Manual Part 6, 53-30-00, Procedure 1 (Meter Display), or 737 NDT Manual Part 6, 53-30-00, Procedure 3 (Rotary Probe), or 737 NDT Manual Part 6, 53-30-00, Procedure 4 (Impedance Plane Display).

(c) Do an open hole HFEC inspection of the fastener holes for any crack. Inspect all fastener holes in accordance with 737 NDT Manual Part 6, 51-00-00, Procedure 16.

(d) Cut the cracked fuselage skin common to S-17L. Maintain a minimum of 2D spacing to the centerline of existing fastener locations and cut all internal radii to 0.5 inches.

(e) Do a HFEC Inspection along the edge of the cutout for any crack. Inspect cutout edge in accordance with 737 NDT Manual Part 6, 51-00-00, Procedure 4 (Meter Display), 737 NDT Manual Part 6, 51-00-00, Procedure 23 (Impedance Display).

(f) Make sure there are no cracks along the edge of the cutout and then do an insurance cut of 0.04 inch.

(g) Countersink all fastener holes on the repair doubler. Refer to 737-600 SRM 51-40-08, 737-700 SRM 51-40-08, 737-800 SRM 51-40-08, or 737-800BCF SRM 51-40-08 as an accepted procedure.

(h) Remove sealant and make sure to take caution not to scratch or create any tool marks on the faying surface of mating parts. Refer to SOPM 20-50-19 as an accepted procedure.

(i) Measure the gap between the stringer flange and the fuselage skin. Measure gap between splice angle and stringer flange. If any gap is more than 0.050 inches, contact The Boeing Company for repair instructions and do the repair.

(j) Measure the gap between the stringer flange and the intercostal. Measure gap between splice angle and intercostal. If any gap is more than 0.050 inches, contact The Boeing Company for repair instructions and do the repair.

FIGURE 8: SKIN REPAIR AT ZONE 3
(SHEET 6 OF 9)

Step	Task	Name	Identification	Qty	More Data
(k)	Make shim/tapered filler from 2024-T3 Clad sheet per QQ-A-250/5. Size the shim/tapered filler to match the gap so that pull up prior to fastener installation does not exceed 0.010 inches.				
(l)	Apply chemical conversion coating to all bare surfaces of the repair parts and existing structure. Omit coating in fastener holes. Refer to SOPM 20-43-03 as an accepted procedure.				
(m)	Apply two layers of BMS 10-11 Type I primer to all unprimed surfaces of the repair parts and existing structure. Omit coating in fastener holes. Refer to SOPM 20-41-02 as an accepted procedure.				
(n)	Temporarily position shim/tapered filler firmly against the adjacent structure, then backdrill existing fastener holes through the shim/tapered filler. Refer to fastener code table for final hole size. Refer to 737-600 SRM 51-10-02, 737-700 SRM 51-10-02, 737-800 SRM 51-10-02, or 737-800BCF SRM 51-10-02 as an accepted procedure.				
(o)	Apply BMS 5-95 sealant to all mating surfaces of the shim/tapered filler. Refer to SOPM 20-50-19 as an accepted procedure.				
(p)	Refer to fastener code table for installation of fasteners. Refer to 737-600 SRM 51-40-02, 737-700 SRM 51-40-02, 737-800 SRM 51-40-02, or 737-800BCF SRM 51-40-02 as an accepted procedure.				
(q)	Make filler and doubler from 2024-T3 clad sheet QQ-A-250/5.				
(r)	Size the filler to maintain a maximum of 0.050 inch gap on all sides to the existing skin with external radii of 0.5 inch and a thickness of 0.063 inches.				
(s)	Size the doubler to maintain 0.5 inch edge margin for the outermost rows of fasteners and cut all external radii to 0.5 inch.				
(t)	Contour to match the area, pre-form to match the contour of the fuselage. Refer to 737-600 SRM 51-30-01, 737-700 SRM 51-30-01, 737-800 SRM 51-30-01, or 737-800BCF SRM 51-30-01 prior to fastener installation.				
(u)	Make doubler thickness 0.063 inches and chamfer all edges in accordance with 737-600 SRM 51-10-01, 737-700 SRM 51-10-01, 737-800 SRM 51-10-01, or 737-800BCF SRM 51-10-01 for aerodynamic smoothness.				
(v)	Align all sides of the filler so the maximum gap between the filler and existing skin does not exceed 0.050 inches.				
(w)	Manufacture repair washers in accordance with 737-600 SRM 51-40-08, 737-700 SRM 51-40-08, 737-800 SRM 51-40-08, or 737-800BCF SRM 51-40-08 and install repair washers in existing fastener locations.				
(x)	Maintain a surface roughness of 63 microinches RA. Refer to 737-600 SRM 51-20-13, 737-700 SRM 51-20-13, 737-800 SRM 51-20-13, or 737-800BCF SRM 51-20-13 as an accepted procedure.				

FIGURE 8: SKIN REPAIR AT ZONE 3
(SHEET 7 OF 9)

Step	Task	Name	Identification	Qty	More Data
(y) As an acceptable procedure: 1) Temporarily position the filler firmly against the adjacent structure. 2) Backdrill the existing fastener locations through the filler. 3) Remove the temporary fasteners in order to position the doubler firmly against the adjacent structure. 4) Backdrill existing fastener locations through the stackup to the doubler. Refer to the fastener code table for final hole size. Refer to 737-600 SRM 51-10-02, 737-700 SRM 51-10-02, 737-800 SRM 51-10-02, or 737-800BCF SRM 51-10-02 as an accepted procedure.					
(z) The driven rivet button must not ride the chem-milled radius. The edge of the hole must not be in the chem-milled radius.					
(aa) Edge fillet seal around the entire outer edge of the doubler. Edge fillet seal around entire periphery of internal structure affected by this repair. Refer to SOPM 20-50-19 as an accepted procedure.					
(ab) Break all sharp edges.					
(ac) Apply BMS 5-95 sealant to all mating surfaces of repair parts and existing structure. Refer to SOPM 20-50-19 as an accepted procedure.					
(ad) Fill the gap around the filler with BMS 5-95.					
(ae) Install temporary hardware to clamp repair part with structure for sealant squeeze out. Make sure fastener holes are aligned. Allow sealant to cure before removing temporary hardware. Refer to SOPM 20-50-19 as an accepted procedure.					
(af) Remove all debris from faying surfaces. Deburr accessible hole edges. Take caution not to scratch or create any tool marks on the surface of mating parts.					
(ag) Clean up excess sealant internally to the filler. Refer to SOPM 20-50-19 as an accepted procedure.					
(ah) Install temporary fasteners to tightly clamp the structure as drilling progresses to prevent debris from getting into voids between part surfaces. Use newly sharpened drills and reamers. Deburr accessible hole edges. Refer to 737-600 SRM 51-10-02, 737-700 SRM 51-10-02, 737-800 SRM 51-10-02, or 737-800BCF SRM 51-10-02 as an accepted procedure.					
(ai) Install all rivets dry. Ensure fastener holes are free of sealant and/or contamination before rivet installation.					
(aj) Layout and drill fastener holes. Maintain 4D-6D fastener spacing.					
(ak) Apply Corrosion Inhibiting Compound (CIC) to the internal area of work. Refer to SOPM 20-41-05 as an accepted procedure.					

FIGURE 8: SKIN REPAIR AT ZONE 3
(SHEET 8 OF 9)

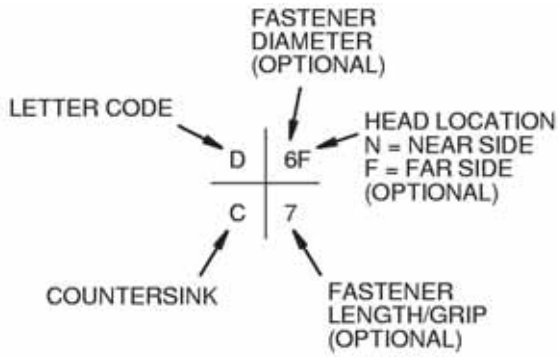

EXAMPLE OF FASTENER SYMBOL

The codes shown below agree with the letter shown in the upper left corner of the fastener symbols in the figure. A number in the lower right corner gives the grip length of the fastener. The QTY numbers shown below are the number of fasteners necessary for this figure.

Code	Name	Identification	Qty	Hole Dia	More Data
A	BOLT	BACB30NW6K( )Y	40	0.216 - 0.219	(a)(b)(c)(d)
	COLLAR	BACC30R6	40	-	-
B	RIVET	BACR15GF6D	72	0.190 - 0.196	(a)(b)
C	RIVET	BACR15ET7D( )	15	0.225 - 0.231	(b)(d)
(a) 100 deg. countersink head.					
(b) Install fasteners. Refer to737-600 SRM 51-40-02, 737-700 SRM 51-40-02, 737-800 SRM 51-40-02, or 737-800BCF SRM 51-40-02 as an accepted procedure.					
(c) Install fasteners wet with BMS 5-95. Refer to 737-600 SRM 51-20-05, 737-700 SRM 51-20-05, 737-800 SRM 51-20-05, or 737-800BCF SRM 51-20-05 as an accepted procedure.					
(d) If more fasteners were required for removal, install this fastener type at the location required.					

FIGURE 8: SKIN REPAIR AT ZONE 3
(SHEET 9 OF 9)

ALERT **ALERT**

This Figure applies only to: Group 1, Configuration 1-2; Group 2, Configuration 1-2; Group 3, Configuration 1-2.

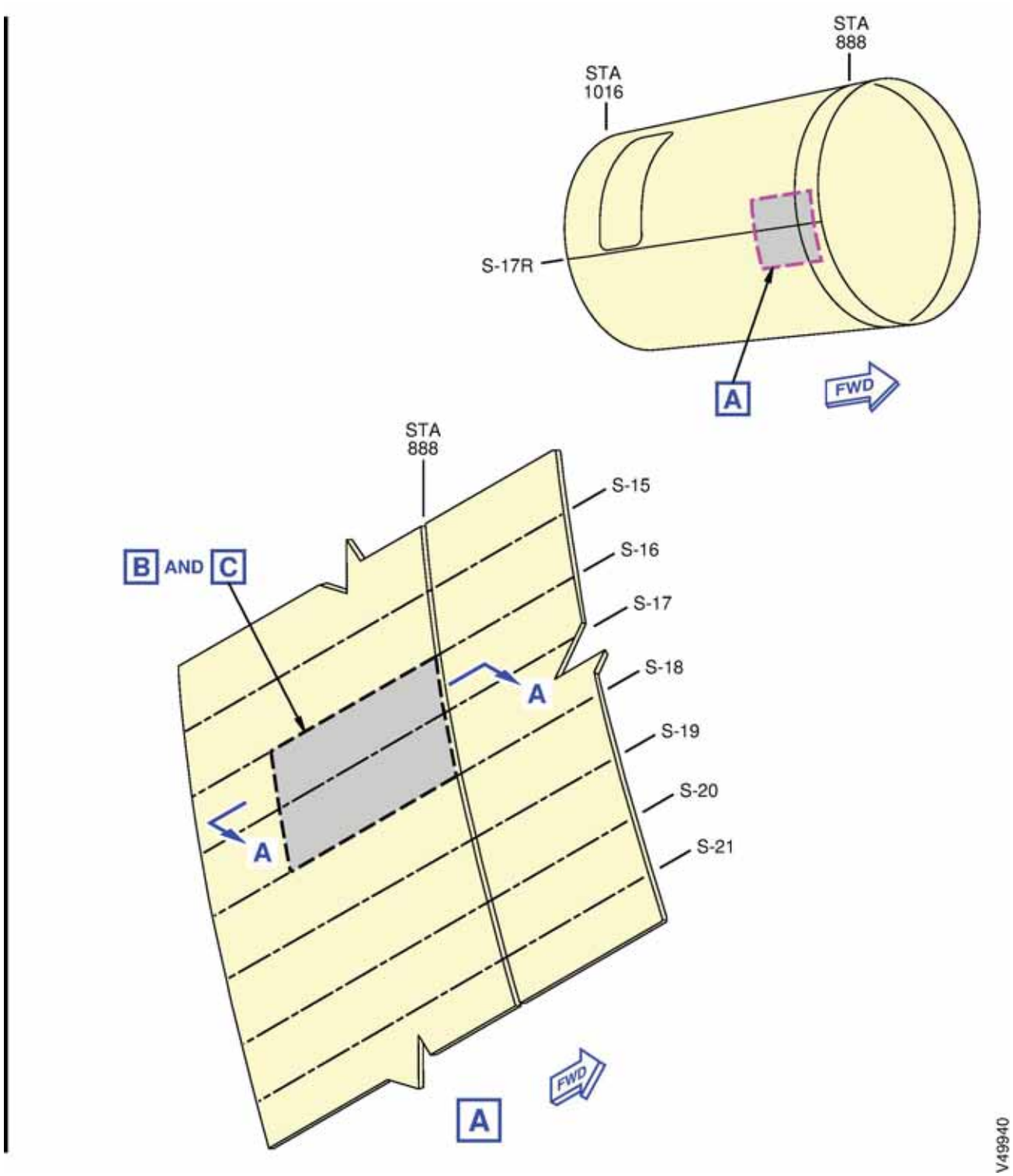

FIGURE 9: SKIN REPAIR AT ZONE 4
(SHEET 1 OF 9)

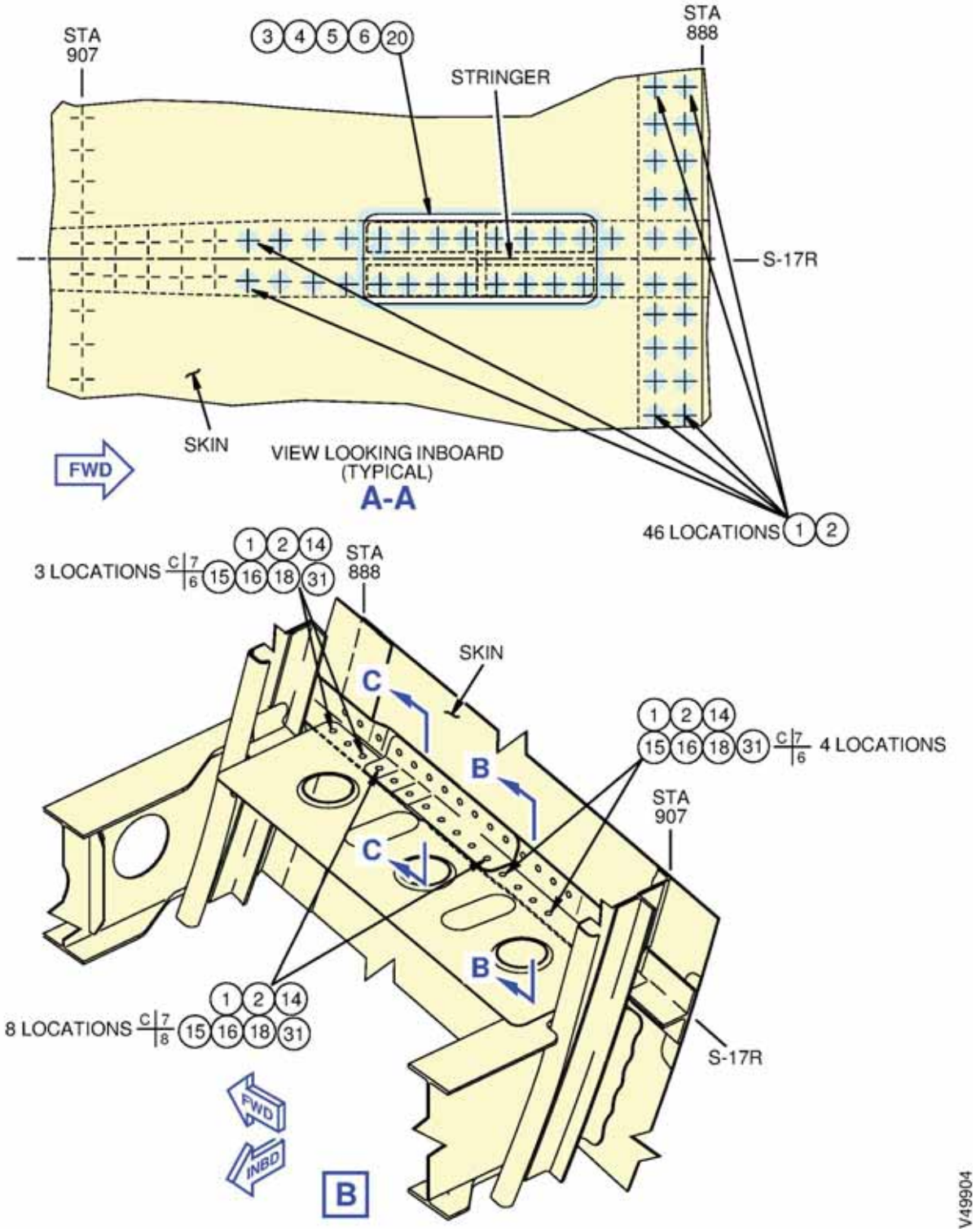

FIGURE 9: SKIN REPAIR AT ZONE 4
(SHEET 2 OF 9)

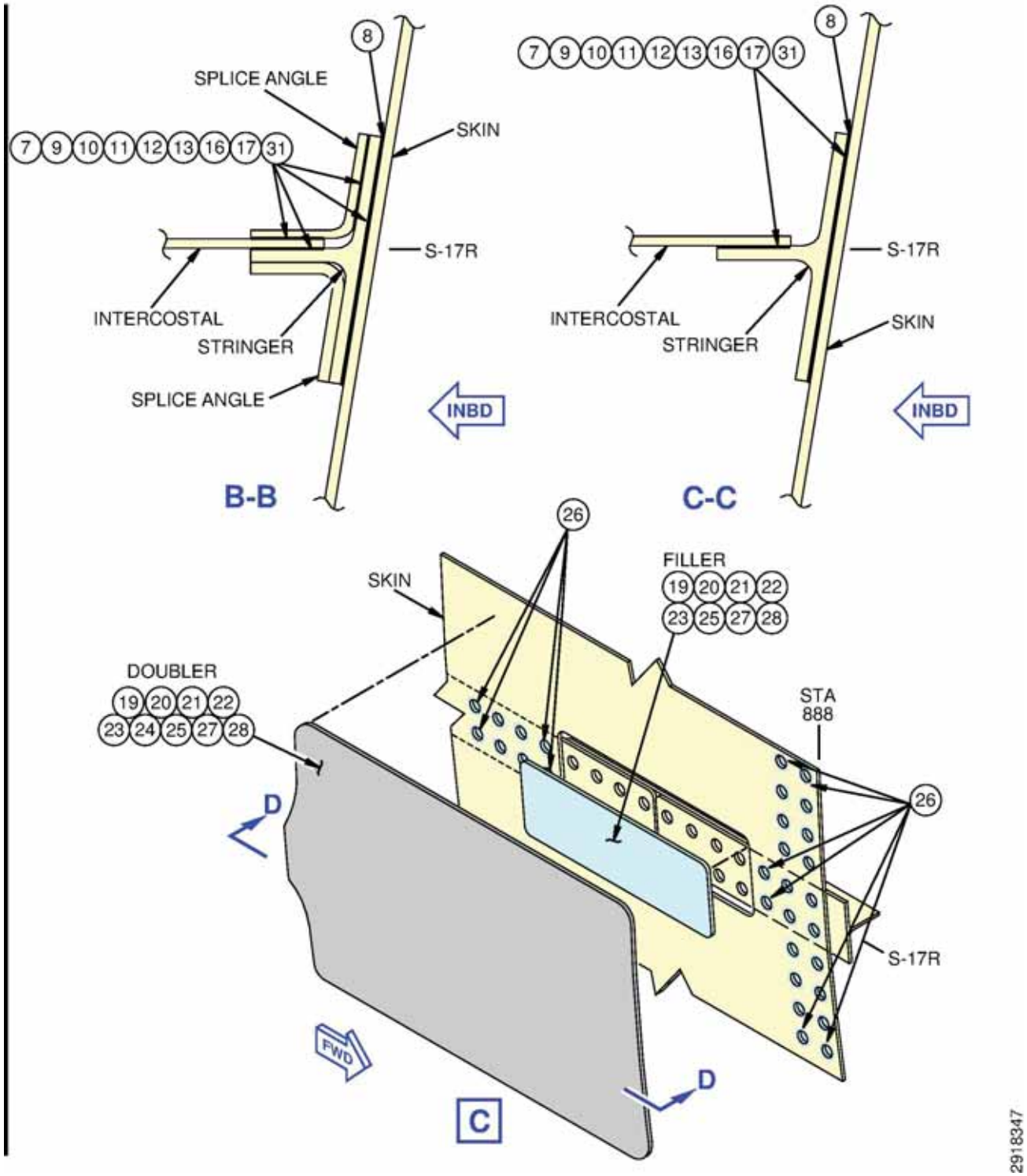

FIGURE 9: SKIN REPAIR AT ZONE 4
(SHEET 3 OF 9)

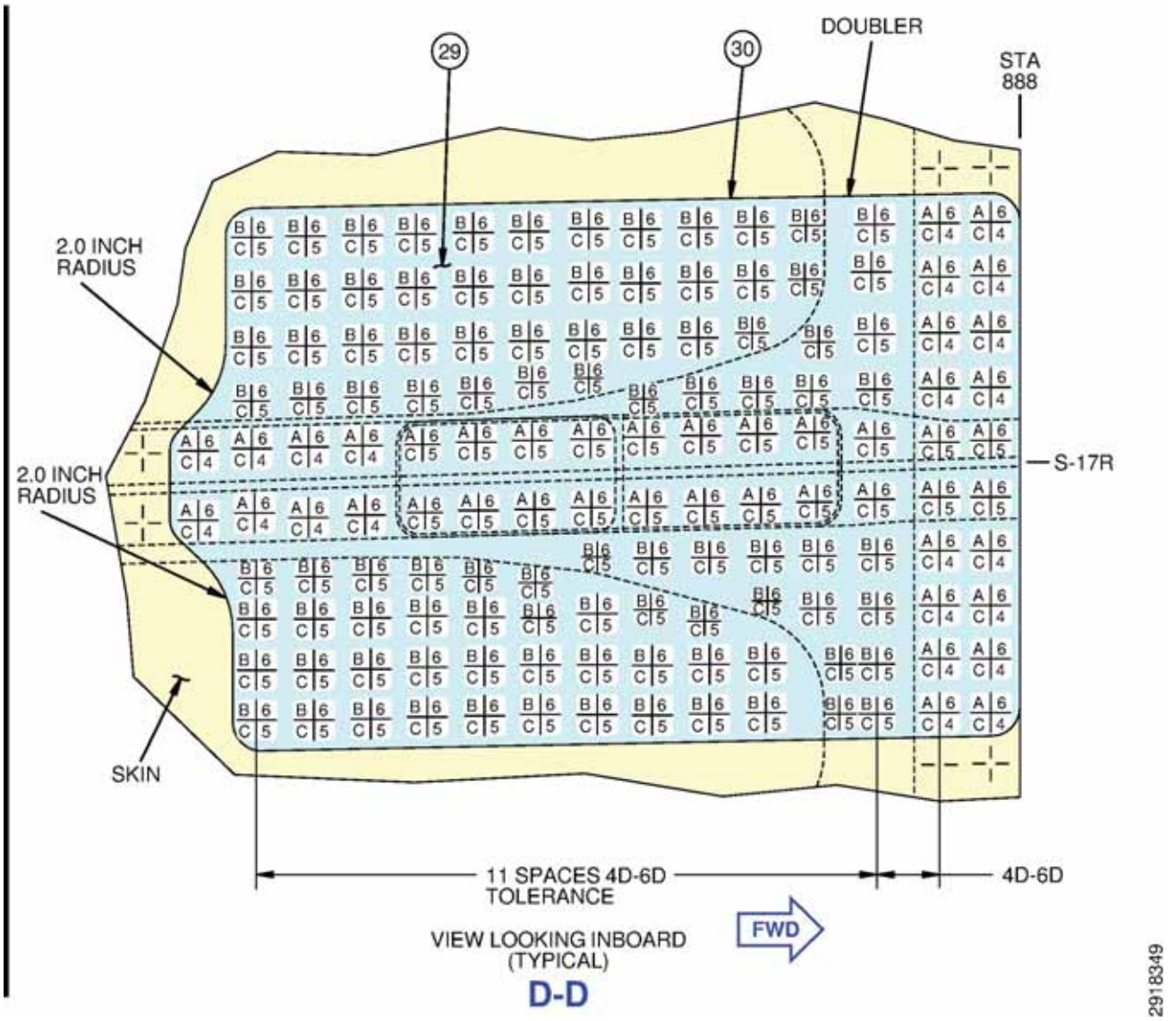

CAUTION

MAKE SURE STRINGER S-17 IS NOT CUT OR DAMAGED WHEN CUTTING AND REMOVING THE CRACKED SKIN.

The step numbers shown below agree with the numbers shown in the circle symbols in the figure. The QTY numbers shown below are the number of parts necessary for this figure.

Step	Task	Name	Identification	Qty	More Data
1	Remove	FASTENERS	-	61	(a)
2	Inspect	EXISTING FASTENER HOLES	-	61	(b)(c)

FIGURE 9: SKIN REPAIR AT ZONE 4 (SHEET 4 OF 9)

Step	Task	Name	Identification	Qty	More Data
3	Cut	SKIN	STRINGER S-17	-	(d)
4	Inspect	SKIN	STRINGER S-17	-	(e)
5	Cut	SKIN	STRINGER S-17	-	(f)
6	Deburr	SKIN	STRINGER S-17	-	(ab)(x)
7	Remove	SEALANT	STRINGER FLANGE	-	(h)
8	Measure	GAP	-	-	(i)(j)
9	Make	SHIM/TAPERED FILLER	-	-	(k)(ab)
10	Apply	CHEMICAL CONVERSION COATING	TYPE II, CLASS A	-	(l)
	Apply	PRIMER	BMS 10-11, TYPE I	-	(m)
11	Align	SHIM/TAPERED FILLER	-	-	-
12	Drill	SHIM/TAPERED FILLER	-	-	(n)(ah)
13	Remove	SHIM/TAPERED FILLER	-	-	-
14	Clean/Deburr	SHIM/TAPERED FILLER	-	-	(ab)
15	Clean	SKIN, STRINGER, SPLICE ANGLE, INTERCOSTAL	-	-	(af)
16	Apply	SEALANT	BMS 5-95	-	(o)
17	Align	SHIM/TAPERED FILLER	-	-	(ae)
18	Install (New)	FASTENERS	-	15	(p)
19	Make	FILLER	-	1	(q)(r)(t)(ab)(x)
	Make	DOUBLER	-	1	(q)(s)(t)(u)(x)(ab)
20	Apply	CHEMICAL CONVERSION COATING	TYPE II, CLASS A	-	(l)
	Apply	PRIMER	BMS 10-11, TYPE I	-	(m)
21	Align	FILLER	-	1	(v)
	Align	DOUBLER	-	1	-
22	Drill	DOUBLER/FILLER	-	-	(y)(ah)
	Drill	DOUBLER	-	-	(ah)(aj)(z)

FIGURE 9: SKIN REPAIR AT ZONE 4
(SHEET 5 OF 9)

Step	Task	Name	Identification	Qty	More Data
23	Remove	DOUBLER/FILLER	-	-	-
24	Countersink	DOUBLER	-	-	(g)
25	Deburr	DOUBLER/FILLER	-	-	(ab)
	Deburr	SKIN	-	-	-
26	Install (New)	REPAIR WASHER	-	30	(w)
27	Apply	SEALANT	BMS 5-95	-	(ad)
	Apply	SEALANT	BMS 5-95	-	(ac)
28	Align	FILLER	-	1	(ae)
	Align	DOUBLER	-	1	(ae)
29	Install (New)	FASTENERS	-	142	(p)(ai)
30	Apply	SEALANT	BMS 5-95	-	(aa)
31	Apply	CORROSION INHIBITING COMPOUND	BMS 3-23, TYPE II, CLASS 2	-	(ak)

(a) Remove the fasteners as shown. Refer to 737-600 SRM 51-40-02, 737-700 SRM 51-40-02, 737-800 SRM 51-40-02, or 737-800BCF SRM 51-40-02 as an accepted procedure.

(b) Do a High Frequency Eddy Current (HFEC) inspection of the countersunk surface at fastener holes for any crack. Inspect in accordance with 737 NDT Manual Part 6, 53-30-00, Procedure 1 (Meter Display), or 737 NDT Manual Part 6, 53-30-00, Procedure 3 (Rotary Probe), or 737 NDT Manual Part 6, 53-30-00, Procedure 4 (Impedance Plane Display).

(c) Do an open hole HFEC inspection of the fastener holes for any crack. Inspect all fastener holes in accordance with 737 NDT Manual Part 6, 51-00-00, Procedure 16.

(d) Cut the cracked fuselage skin common to S-17R. Maintain a minimum of 2D spacing to the centerline of existing fastener locations and cut all internal radii to 0.5 inches.

(e) Do a HFEC Inspection along the edge of the cutout for any crack. Inspect cutout edge in accordance with 737 NDT Manual Part 6, 51-00-00, Procedure 4 (Meter Display), 737 NDT Manual Part 6, 51-00-00, Procedure 23 (Impedance Display).

(f) Make sure there are no cracks along the edge of the cutout and then do an insurance cut of 0.04 inch.

(g) Countersink all fastener holes on the repair doubler. Refer to 737-600 SRM 51-40-08, 737-700 SRM 51-40-08, 737-800 SRM 51-40-08, or 737-800BCF SRM 51-40-08 as an accepted procedure.

(h) Remove sealant and make sure to take caution not to scratch or create any tool marks on the faying surface of mating parts. Refer to SOPM 20-50-19 as an accepted procedure.

(i) Measure the gap between the stringer flange and the fuselage skin. Measure gap between splice angle and stringer flange. If any gap is more than 0.050 inches, contact The Boeing Company for repair instructions and do the repair.

(j) Measure the gap between the stringer flange and the intercostal. Measure gap between splice angle and intercostal. If any gap is more than 0.050 inches, contact The Boeing Company for repair instructions and do the repair.

FIGURE 9: SKIN REPAIR AT ZONE 4
(SHEET 6 OF 9)

Step	Task	Name	Identification	Qty	More Data
(k)	Make shim/tapered filler from 2024-T3 Clad sheet per QQ-A-250/5. Size the shim/tapered filler to match the gap so that pull up prior to fastener installation does not exceed 0.010 inches.				
(l)	Apply chemical conversion coating to all bare surfaces of the repair parts and existing structure. Omit coating in fastener holes. Refer to SOPM 20-43-03 as an accepted procedure.				
(m)	Apply two layers of BMS 10-11 Type I primer to all unprimed surfaces of the repair parts and existing structure. Omit coating in fastener holes. Refer to SOPM 20-41-02 as an accepted procedure.				
(n)	Temporarily position shim/tapered filler firmly against the adjacent structure, then backdrill existing fastener holes through the shim/tapered filler. Refer to fastener code table for final hole size. Refer to 737-600 SRM 51-10-02, 737-700 SRM 51-10-02, 737-800 SRM 51-10-02, or 737-800BCF SRM 51-10-02 as an accepted procedure.				
(o)	Apply BMS 5-95 sealant to all mating surfaces of the shim/tapered filler. Refer to SOPM 20-50-19 as an accepted procedure.				
(p)	Refer to fastener code table for installation of fasteners. Refer to 737-600 SRM 51-40-02, 737-700 SRM 51-40-02, 737-800 SRM 51-40-02, or 737-800BCF SRM 51-40-02 as an accepted procedure.				
(q)	Make filler and doubler from 2024-T3 clad sheet QQ-A-250/5.				
(r)	Size the filler to maintain a maximum of 0.050 inch gap on all sides to the existing skin with external radii of 0.5 inch and a thickness of 0.063 inches.				
(s)	Size the doubler to maintain 0.5 inch edge margin for the outermost rows of fasteners and cut all external radii of 0.5 inch.				
(t)	Contour to match the area, pre-form to match the contour of the fuselage. Refer to 737-600 SRM 51-30-01, 737-700 SRM 51-30-01, 737-800 SRM 51-30-01, or 737-800BCF SRM 51-30-01 prior to fastener installation.				
(u)	Make doubler thickness 0.063 inches and chamfer all edges in accordance with 737-600 SRM 51-10-01, 737-700 SRM 51-10-01, 737-800 SRM 51-10-01, or 737-800BCF SRM 51-10-01 for aerodynamic smoothness.				
(v)	Align all sides of the filler so the maximum gap between the filler and existing skin does not exceed 0.050 inches.				
(w)	Manufacture repair washers in accordance with 737-600 SRM 51-40-08, 737-700 SRM 51-40-08, 737-800 SRM 51-40-08, or 737-800BCF SRM 51-40-08 and install repair washers in existing fastener locations.				
(x)	Maintain a surface roughness of 63 microinches RA. Refer to 737-600 SRM 51-20-13, 737-700 SRM 51-20-13, 737-800 SRM 51-20-13, or 737-800BCF SRM 51-20-13 as an accepted procedure.				

FIGURE 9: SKIN REPAIR AT ZONE 4
(SHEET 7 OF 9)

Step	Task	Name	Identification	Qty	More Data
(y) As an acceptable procedure: 1) Temporarily position the filler firmly against the adjacent structure. 2) Backdrill the existing fastener locations through the filler. 3) Remove the temporary fasteners in order to position the doubler firmly against the adjacent structure. 4) Backdrill existing fastener locations through the stackup to the doubler. Refer to the fastener code table for final hole size. Refer to 737-600 SRM 51-10-02, 737-700 SRM 51-10-02, 737-800 SRM 51-10-02, or 737-800BCF SRM 51-10-02 as an accepted procedure.					
(z) The driven rivet button must not ride the chem-milled radius. The edge of the hole must not be in the chem-milled radius.					
(aa) Edge fillet seal around the entire outer edge of the doubler. Edge fillet seal around entire periphery of internal structure affected by this repair. Refer to SOPM 20-50-19 as an accepted procedure.					
(ab) Break all sharp edges.					
(ac) Apply BMS 5-95 sealant to all mating surfaces of repair parts and existing structure. Refer to SOPM 20-50-19 as an accepted procedure.					
(ad) Fill the gap around the filler with BMS 5-95.					
(ae) Install temporary hardware to clamp repair part with structure for sealant squeeze out. Make sure fastener holes are aligned. Allow sealant to cure before removing temporary hardware. Refer to SOPM 20-50-19 as an accepted procedure.					
(af) Remove all debris from faying surfaces. Deburr accessible hole edges. Take caution not to scratch or create any tool marks on the surface of mating parts.					
(ag) Clean up excess sealant internally to the filler. Refer to SOPM 20-50-19 as an accepted procedure.					
(ah) Install temporary fasteners to tightly clamp the structure as drilling progresses to prevent debris from getting into voids between part surfaces. Use newly sharpened drills and reamers. Deburr accessible hole edges. Refer to 737-600 SRM 51-10-02, 737-700 SRM 51-10-02, 737-800 SRM 51-10-02, or 737-800BCF SRM 51-10-02 as an accepted procedure.					
(ai) Install all rivets dry. Ensure fastener holes are free of sealant and/or contamination before rivet installation.					
(aj) Layout and drill fastener holes. Maintain 4D-6D fastener spacing.					
(ak) Apply Corrosion Inhibiting Compound (CIC) to the internal area of work. Refer to SOPM 20-41-05 as an accepted procedure.					

FIGURE 9: SKIN REPAIR AT ZONE 4
(SHEET 8 OF 9)

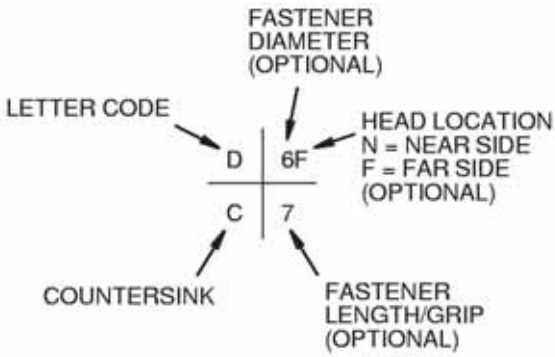

EXAMPLE OF FASTENER SYMBOL

The codes shown below agree with the letter shown in the upper left corner of the fastener symbols in the figure. A number in the lower right corner gives the grip length of the fastener. The QTY numbers shown below are the number of fasteners necessary for this figure.

Code	Name	Identification	Qty	Hole Dia	More Data
A	BOLT	BACB30NW6K( )Y	46	0.216 - 0.219	(a)(b)(c)(d)
	COLLAR	BACC30R6	46	-	-
B	RIVET	BACR15GF6D	96	0.190 - 0.196	(a)(b)
C	RIVET	BACR15ET7D( )	15	0.225 - 0.231	(b)(d)
(a) 100 deg. countersink head.					
(b) Install fasteners. Refer to 737-600 SRM 51-40-02, 737-700 SRM 51-40-02, 737-800 SRM 51-40-02, or 737-800BCF SRM 51-40-02 as an accepted procedure.					
(c) Install fasteners wet with BMS 5-95. Refer to 737-600 SRM 51-20-05, 737-700 SRM 51-20-05, 737-800 SRM 51-20-05, or 737-800BCF SRM 51-20-05 as an accepted procedure.					
(d) If more fasteners were required for removal, install this fastener type at the location required.					

FIGURE 9: SKIN REPAIR AT ZONE 4
(SHEET 9 OF 9)

ALERT **ALERT**

This Figure applies only to: Group 3, Configuration 1-2.

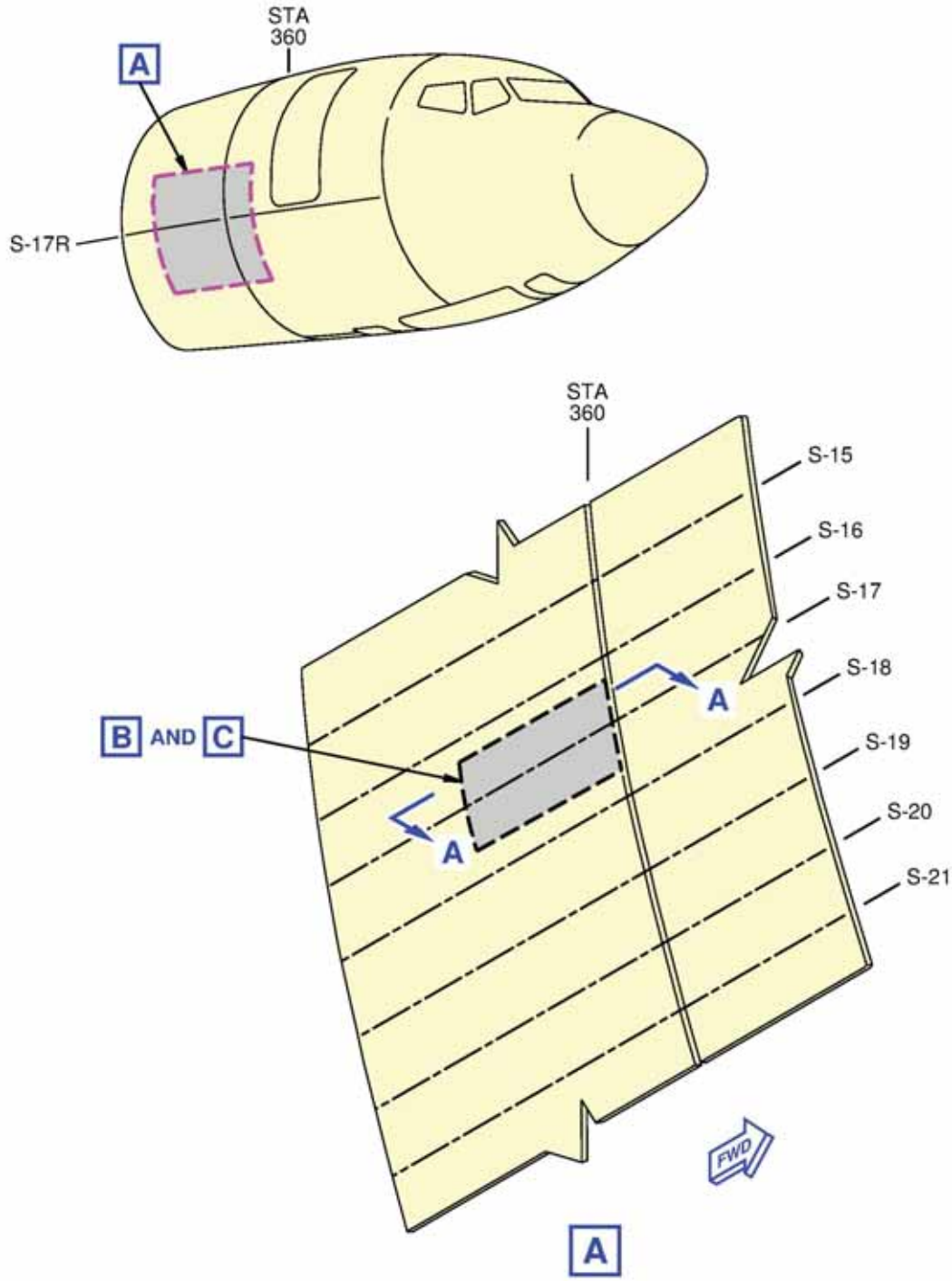

FIGURE 10: SKIN REPAIR AT ZONE 2
(SHEET 1 OF 9)

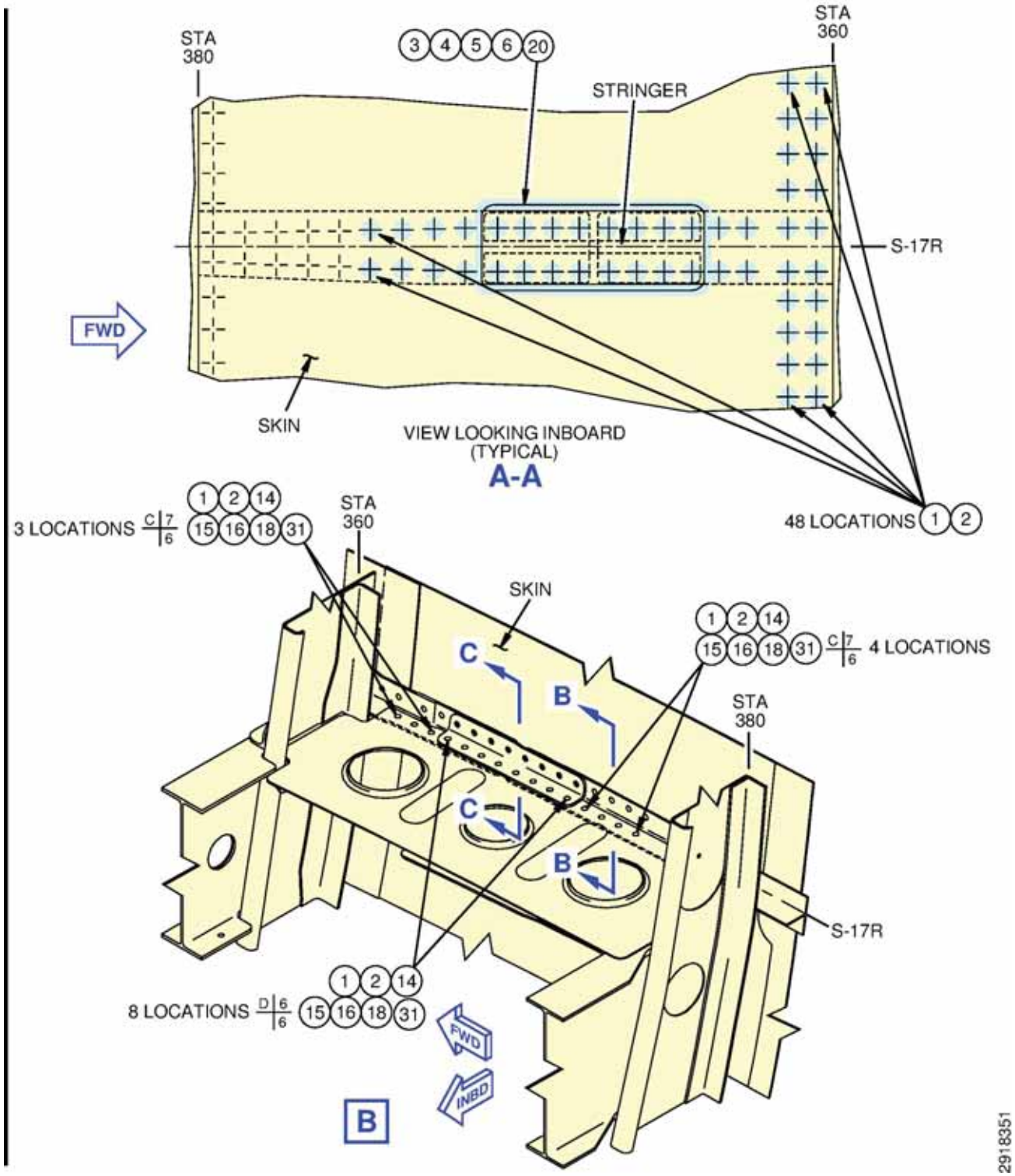

FIGURE 10: SKIN REPAIR AT ZONE 2 (SHEET 2 OF 9)

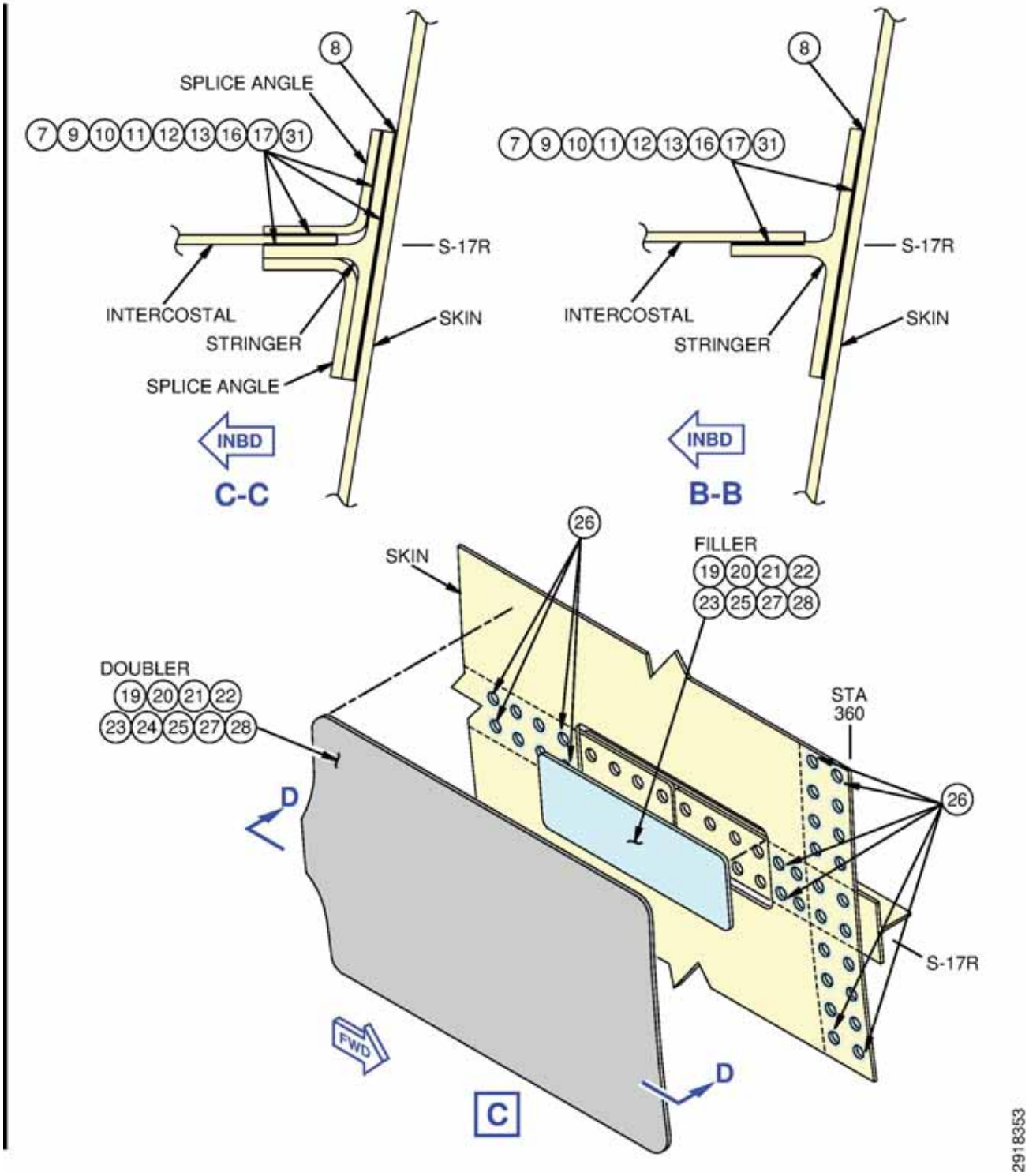

FIGURE 10: SKIN REPAIR AT ZONE 2
(SHEET 3 OF 9)

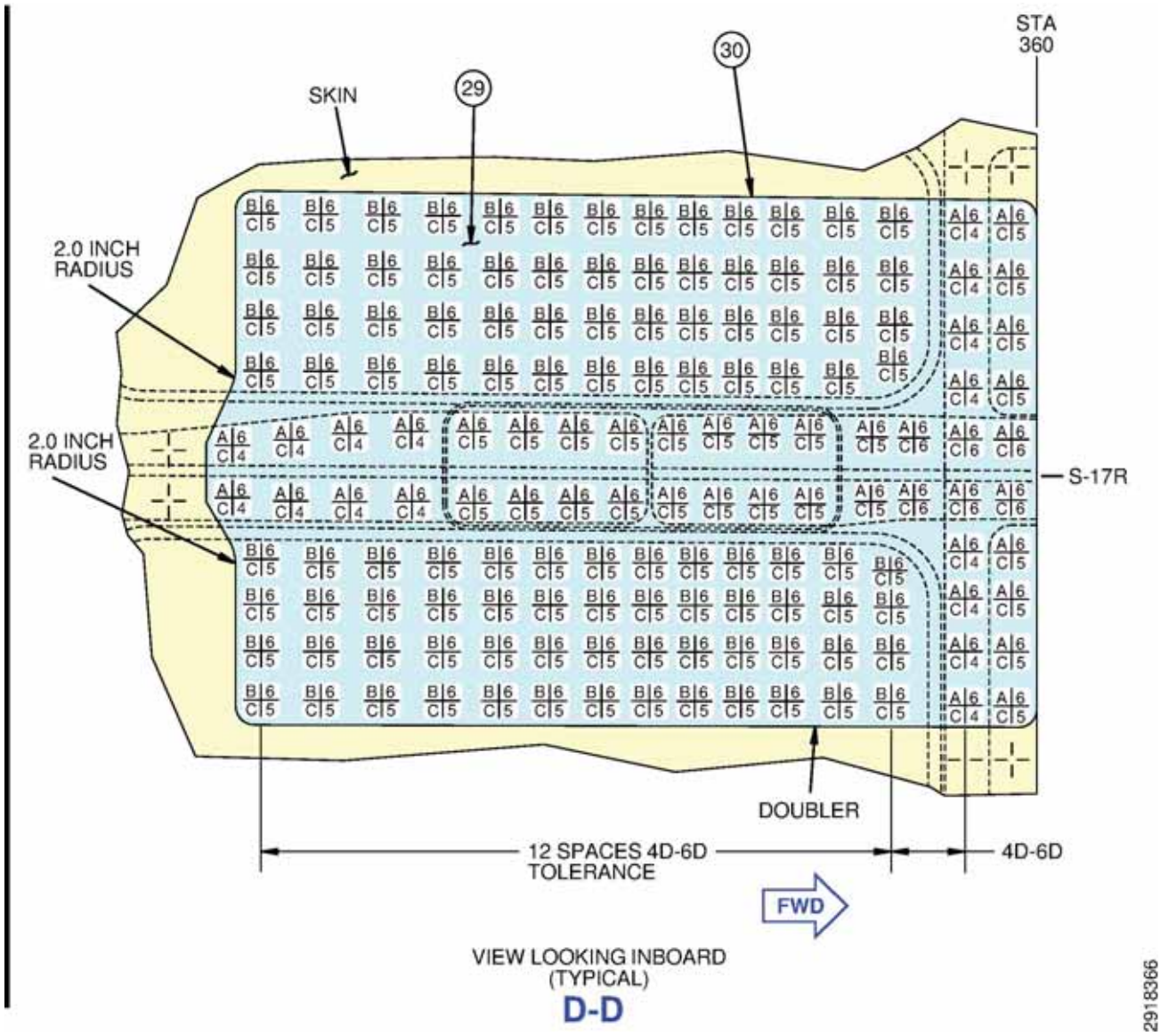

CAUTION MAKE SURE STRINGER S-17 IS NOT CUT OR DAMAGED WHEN CUTTING AND REMOVING THE CRACKED SKIN.

The step numbers shown below agree with the numbers shown in the circle symbols in the figure. The QTY numbers shown below are the number of parts necessary for this figure.

Step	Task	Name	Identification	Qty	More Data
1	Remove	FASTENERS	-	63	(a)
2	Inspect	EXISTING FASTENER HOLES	-	63	(b)(c)

FIGURE 10: SKIN REPAIR AT ZONE 2 (SHEET 4 OF 9)

Step	Task	Name	Identification	Qty	More Data
3	Cut	SKIN	STRINGER S-17	-	(d)
4	Inspect	SKIN	STRINGER S-17	-	(e)
5	Cut	SKIN	STRINGER S-17	-	(f)
6	Deburr	SKIN	STRINGER S-17	-	(ab)(x)
7	Remove	SEALANT	STRINGER FLANGE	-	(h)
8	Measure	GAP	-	-	(i)(j)
9	Make	SHIM/TAPERED FILLER	-	-	(k)(ab)
10	Apply	CHEMICAL CONVERSION COATING	TYPE II, CLASS A	-	(l)
	Apply	PRIMER	BMS 10-11, TYPE I	-	(m)
11	Align	SHIM/TAPERED FILLER	-	-	-
12	Drill	SHIM/TAPERED FILLER	-	-	(n)(ah)
13	Remove	SHIM/TAPERED FILLER	-	-	-
14	Clean/Deburr	SHIM/TAPERED FILLER	-	-	(ab)
15	Clean	SKIN, STRINGER, SPLICE ANGLE, INTERCOSTAL	-	-	(af)
16	Apply	SEALANT	BMS 5-95	-	(o)
17	Align	SHIM/TAPERED FILLER	-	-	(ae)
18	Install (New)	FASTENERS	-	15	(p)
19	Make	FILLER	-	1	(q)(r)(t)(ab)(x)
	Make	DOUBLER	-	1	(q)(s)(t)(u)(x)(ab)
20	Apply	CHEMICAL CONVERSION COATING	TYPE II, CLASS A	-	(l)
	Apply	PRIMER	BMS 10-11, TYPE I	-	(m)
21	Align	FILLER	-	1	(v)
	Align	DOUBLER	-	1	-
22	Drill	DOUBLER/FILLER	-	-	(y)(ah)
	Drill	DOUBLER	-	-	(ah)(aj)(z)

FIGURE 10: SKIN REPAIR AT ZONE 2
(SHEET 5 OF 9)

Step	Task	Name	Identification	Qty	More Data
23	Remove	DOUBLER/FILLER	-	-	-
24	Countersink	DOUBLER	-	-	(g)
25	Deburr	DOUBLER/FILLER	-	-	(ab)
	Deburr	SKIN	-	-	-
26	Install (New)	REPAIR WASHER	-	32	(w)
27	Apply	SEALANT	BMS 5-95	-	(ad)
	Apply	SEALANT	BMS 5-95	-	(ac)
28	Align	FILLER	-	1	(ae)
	Align	DOUBLER	-	1	(ae)
29	Install (New)	FASTENERS	-	152	(p)(ai)
30	Apply	SEALANT	BMS 5-95	-	(aa)
31	Apply	CORROSION INHIBITING COMPOUND	BMS 3-23, TYPE II, CLASS 2	-	(ak)

(a) Remove the fasteners as shown. Refer to 737-600 SRM 51-40-02 as an accepted procedure.

(b) Do a High Frequency Eddy Current (HFEC) inspection of the countersunk surface at fastener holes for any crack. Inspect in accordance with 737 NDT Manual Part 6, 53-30-00, Procedure 1 (Meter Display), or 737 NDT Manual Part 6, 53-30-00, Procedure 3 (Rotary Probe), or 737 NDT Manual Part 6, 53-30-00, Procedure 4 (Impedance Plane Display).

(c) Do an open hole HFEC inspection of the fastener holes for any crack. Inspect all fastener holes in accordance with 737 NDT Manual Part 6, 51-00-00, Procedure 16.

(d) Cut the cracked fuselage skin common to S-17R. Maintain a minimum of 2D spacing to the centerline of existing fastener locations and cut all internal radii to 0.5 inches.

(e) Do a HFEC Inspection along the edge of the cutout for any crack. Inspect cutout edge in accordance with 737 NDT Manual Part 6, 51-00-00, Procedure 4 (Meter Display), 737 NDT Manual Part 6, 51-00-00, Procedure 23 (Impedance Display).

(f) Make sure there are no cracks along the edge of the cutout and then do an insurance cut of 0.04 inch.

(g) Countersink all fastener holes on the repair doubler. Refer to 737-600 SRM 51-40-08 as an accepted procedure.

(h) Remove sealant and make sure to take caution not to scratch or create any tool marks on the faying surface of mating parts. Refer to SOPM 20-50-19 as an accepted procedure.

(i) Measure the gap between the stringer flange and the fuselage skin. Measure gap between splice angle and stringer flange. If any gap is more than 0.050 inches, contact The Boeing Company for repair instructions and do the repair.

(j) Measure the gap between the stringer flange and the intercostal. Measure gap between splice angle and intercostal. If any gap is more than 0.050 inches, contact The Boeing Company for repair instructions and do the repair.

FIGURE 10: SKIN REPAIR AT ZONE 2
(SHEET 6 OF 9)

Step	Task	Name	Identification	Qty	More Data
(k)	Make shim/tapered filler from 2024-T3 Clad sheet per QQ-A-250/5. Size the shim/tapered filler to match the gap so that pull up prior to fastener installation does not exceed 0.010 inches.				
(l)	Apply chemical conversion coating to all bare surfaces of the repair parts and existing structure. Omit coating in fastener holes. Refer to SOPM 20-43-03 as an accepted procedure.				
(m)	Apply two layers of BMS 10-11 Type I primer to all unprimed surfaces of the repair parts and existing structure. Omit coating in fastener holes. Refer to SOPM 20-41-02 as an accepted procedure.				
(n)	Temporarily position shim/tapered filler firmly against the adjacent structure, then backdrill existing fastener holes through the shim/tapered filler. Refer to fastener code table for final hole size. Refer to 737-600 SRM 51-10-02 as an accepted procedure.				
(o)	Apply BMS 5-95 sealant to all mating surfaces of the shim/tapered filler. Refer to SOPM 20-50-19 as an accepted procedure.				
(p)	Refer to fastener code table for installation of fasteners. Refer to 737-600 SRM 51-40-02 as an accepted procedure.				
(q)	Make filler and doubler from 2024-T3 clad sheet QQ-A-250/5.				
(r)	Size the filler to maintain a maximum of 0.050 inch gap on all sides to the existing skin with external radii of 0.5 inch and a thickness of 0.071 inches.				
(s)	Size the doubler to maintain 0.5 inch edge margin for the outermost rows of fasteners and cut all external radii of 0.5 inch.				
(t)	Contour to match the area, pre-form to match the contour of the fuselage. Refer to 737-600 SRM 51-30-01 prior to fastener installation.				
(u)	Make doubler thickness 0.071 inches and chamfer all edges in accordance with 737-600 SRM 51-10-01 for aerodynamic smoothness.				
(v)	Align all sides of the filler so the maximum gap between the filler and existing skin does not exceed 0.050 inches.				
(w)	Manufacture repair washers in accordance with 737-600 SRM 51-40-08 and install repair washers in existing fastener locations.				
(x)	Maintain a surface roughness of 63 microinches RA. Refer to 737-600 SRM 51-20-13 as an accepted procedure.				
(y)	As an acceptable procedure: 1) Temporarily position the filler firmly against the adjacent structure. 2) Backdrill the existing fastener locations through the filler. 3) Remove the temporary fasteners in order to position the doubler firmly against the adjacent structure. 4) Backdrill existing fastener locations through the stackup to the doubler. Refer to the fastener code table for final hole size. Refer to 737-600 SRM 51-10-02 as an accepted procedure.				

FIGURE 10: SKIN REPAIR AT ZONE 2
(SHEET 7 OF 9)

Step	Task	Name	Identification	Qty	More Data
(z) The driven rivet button must not ride the chem-milled radius. The edge of the hole must not be in the chem-milled radius.					
(aa) Edge fillet seal around the entire outer edge of the doubler. Edge fillet seal around entire periphery of internal structure affected by this repair. Refer to SOPM 20-50-19 as an accepted procedure.					
(ab) Break all sharp edges.					
(ac) Apply BMS 5-95 sealant to all mating surfaces of repair parts and existing structure. Refer to SOPM 20-50-19 as an accepted procedure.					
(ad) Fill the gap around the filler with BMS 5-95.					
(ae) Install temporary hardware to clamp repair part with structure for sealant squeeze out. Make sure fastener holes are aligned. Allow sealant to cure before removing temporary hardware. Refer to SOPM 20-50-19 as an accepted procedure.					
(af) Remove all debris from faying surfaces. Deburr accessible hole edges. Take caution not to scratch or create any tool marks on the surface of mating parts.					
(ag) Clean up excess sealant internally to the filler. Refer to SOPM 20-50-19 as an accepted procedure.					
(ah) Install temporary fasteners to tightly clamp the structure as drilling progresses to prevent debris from getting into voids between part surfaces. Use newly sharpened drills and reamers. Deburr accessible hole edges. Refer to 737-600 SRM 51-10-02 as an accepted procedure.					
(ai) Install all rivets dry. Ensure fastener holes are free of sealant and/or contamination before rivet installation.					
(aj) Layout and drill fastener holes. Maintain 4D-6D fastener spacing.					
(ak) Apply Corrosion Inhibiting Compound (CIC) to the internal area of work. Refer to SOPM 20-41-05 as an accepted procedure.					

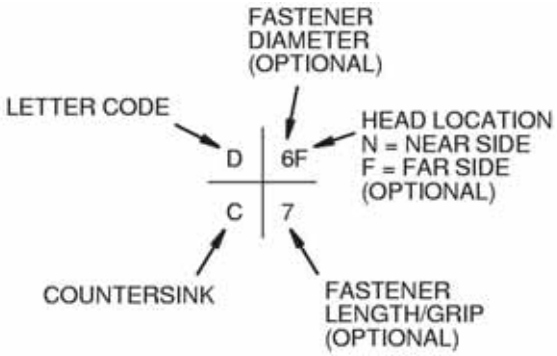

EXAMPLE OF FASTENER SYMBOL

2314995

FIGURE 10: SKIN REPAIR AT ZONE 2
(SHEET 8 OF 9)

ALERT **ALERT**

The codes shown below agree with the letter shown in the upper left corner of the fastener symbols in the figure. A number in the lower right corner gives the grip length of the fastener. The QTY numbers shown below are the number of fasteners necessary for this figure.

Code	Name	Identification	Qty	Hole Dia	More Data
A	BOLT	BACB30NW6K( )Y	48	0.216 - 0.219	(a)(b)(c)(d)
	COLLAR	BACC30R6	48	-	-
B	RIVET	BACR15GF6D	104	0.190 - 0.196	(a)(b)(e)
C	RIVET	BACR15ET7D( )	7	0.225 - 0.231	(b)(d)
D	BOLT	BACB30NX6K( )Y	8	0.216 - 0.219	(b)(c)(d)
	COLLAR	BACC30R6	8	-	-

(a)	100 deg. countersink head.
(b)	Install fasteners. Refer to 737-600 SRM 51-40-02 as an accepted procedure.
(c)	Install fasteners wet with BMS 5-95. Refer to 737-600 SRM 51-20-05 as an accepted procedure.
(d)	If more fasteners were required for removal, install this fastener type at the location required.
(e)	Rivet must be overdriven to 1.5D minimum butt diameter. Refer to 737-600 SRM 51-40-02 as an accepted procedure.

FIGURE 10: SKIN REPAIR AT ZONE 2
(SHEET 9 OF 9)

This Figure applies only to: Group 1, 3, Configuration 3.

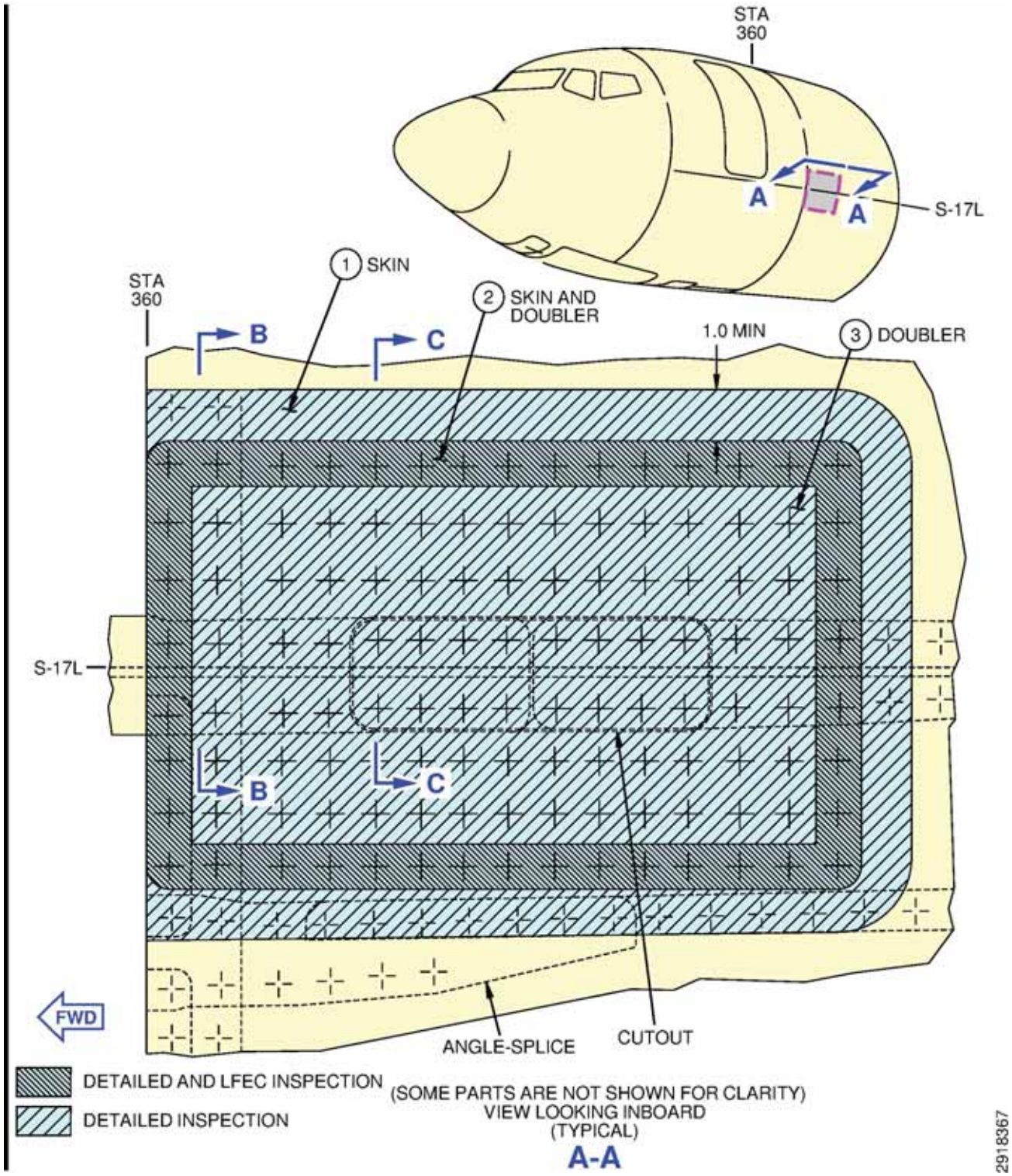

FIGURE 11: POST REPAIR INSPECTION (EXTERNAL) AT ZONE 1 (SHEET 1 OF 3)

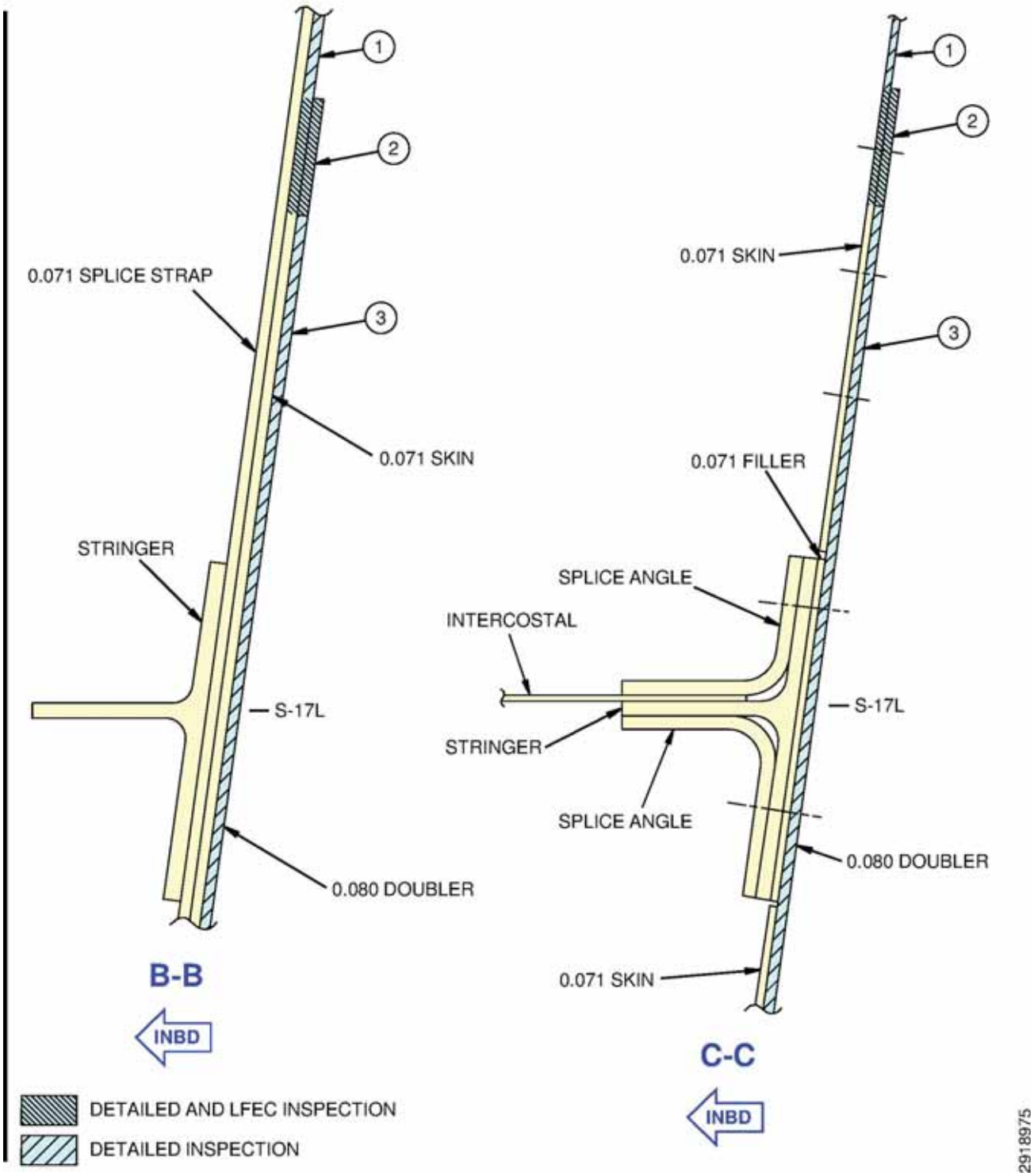

FIGURE 11: POST REPAIR INSPECTION (EXTERNAL) AT ZONE 1 (SHEET 2 OF 3)

ALERT **ALERT**

The step numbers shown below agree with the numbers shown in the circle symbols in the figure. The QTY numbers shown below are the number of parts necessary for this figure.

Step	Task	Name	Identification	Qty	More Data
1	Inspect	SKIN	-	-	(a)
2	Inspect	SKIN	-	-	(b)
	Inspect	DOUBLER	-	-	(c)
3	Inspect	DOUBLER	-	-	(c)

(a) Do a detailed inspection of the skin around the repair doubler edge for any crack.

(b) Do a subsurface Low Frequency Eddy Current (LFEC) inspection of the skin for any crack. Inspect the skin under the doubler in accordance with 737 NDT Manual Part 6, 53-30-00, Procedure 5 or 737 NDT Manual Part 6, 51-00-26.

(c) Do a detailed inspection of the repair doubler for any crack.

FIGURE 11: POST REPAIR INSPECTION (EXTERNAL) AT ZONE 1 (SHEET 3 OF 3)

This Figure applies only to: Group 1, 3, Configuration 3.

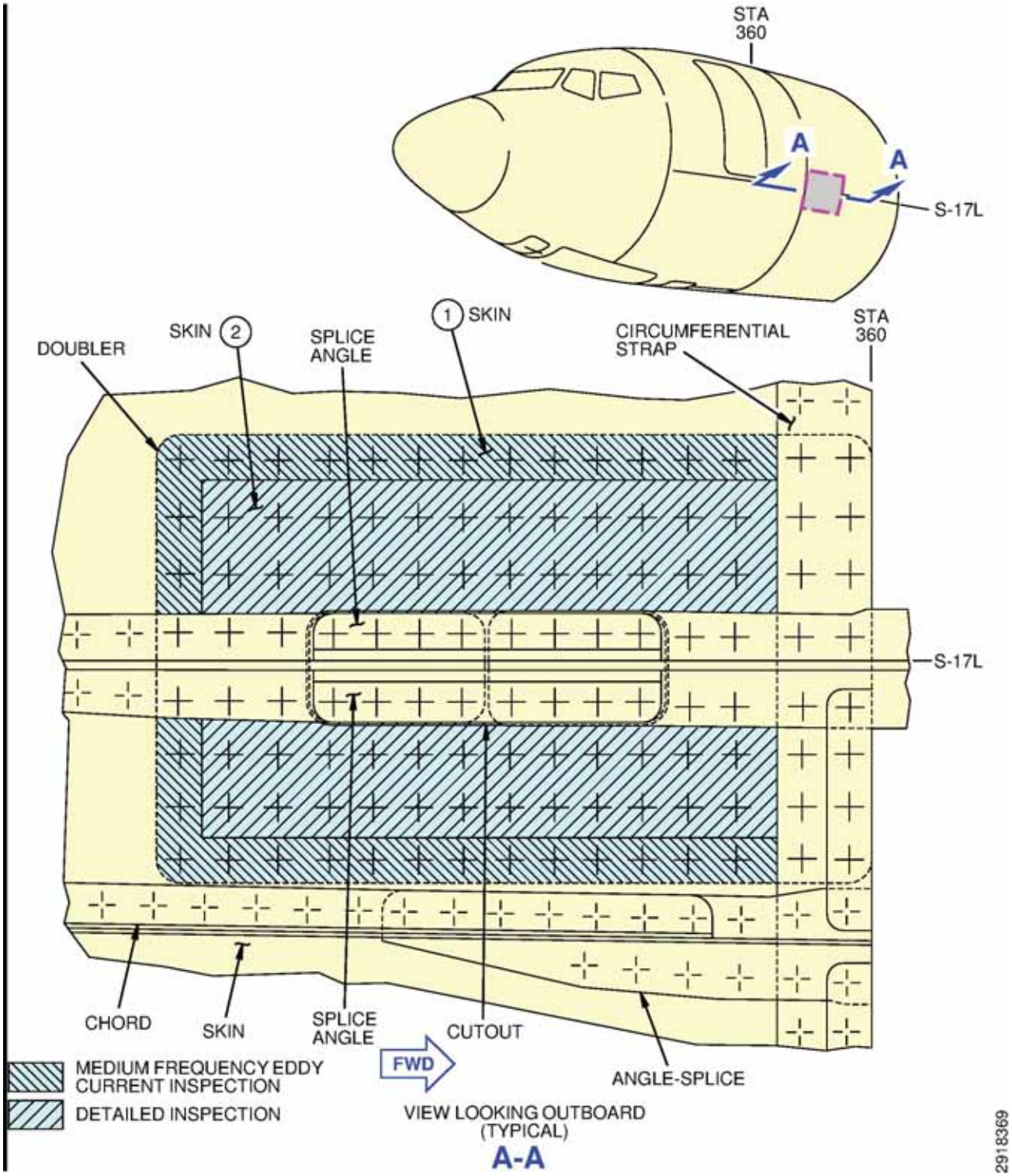

FIGURE 12: POST REPAIR INSPECTION (INTERNAL) AT ZONE 1 (SHEET 1 OF 2)

ALERT **ALERT**

The step numbers shown below agree with the numbers shown in the circle symbols in the figure. The QTY numbers shown below are the number of parts necessary for this figure.

Step	Task	Name	Identification	Qty	More Data
1	Inspect	SKIN	-	-	(a)
2	Inspect	SKIN	-	-	(b)
(a) Do a Medium Frequency Eddy Current (MFEC) inspection of the internal skin for any crack. Inspect where shown in this figure and in accordance with 737 NDT Manual Part 6, 53-30-00, Procedure 7.					
(b) Do a detailed inspection of the skin repair for any crack.					

FIGURE 12: POST REPAIR INSPECTION (INTERNAL) AT ZONE 1 (SHEET 2 OF 2)

This Figure applies only to: Group 1, Configuration 3.

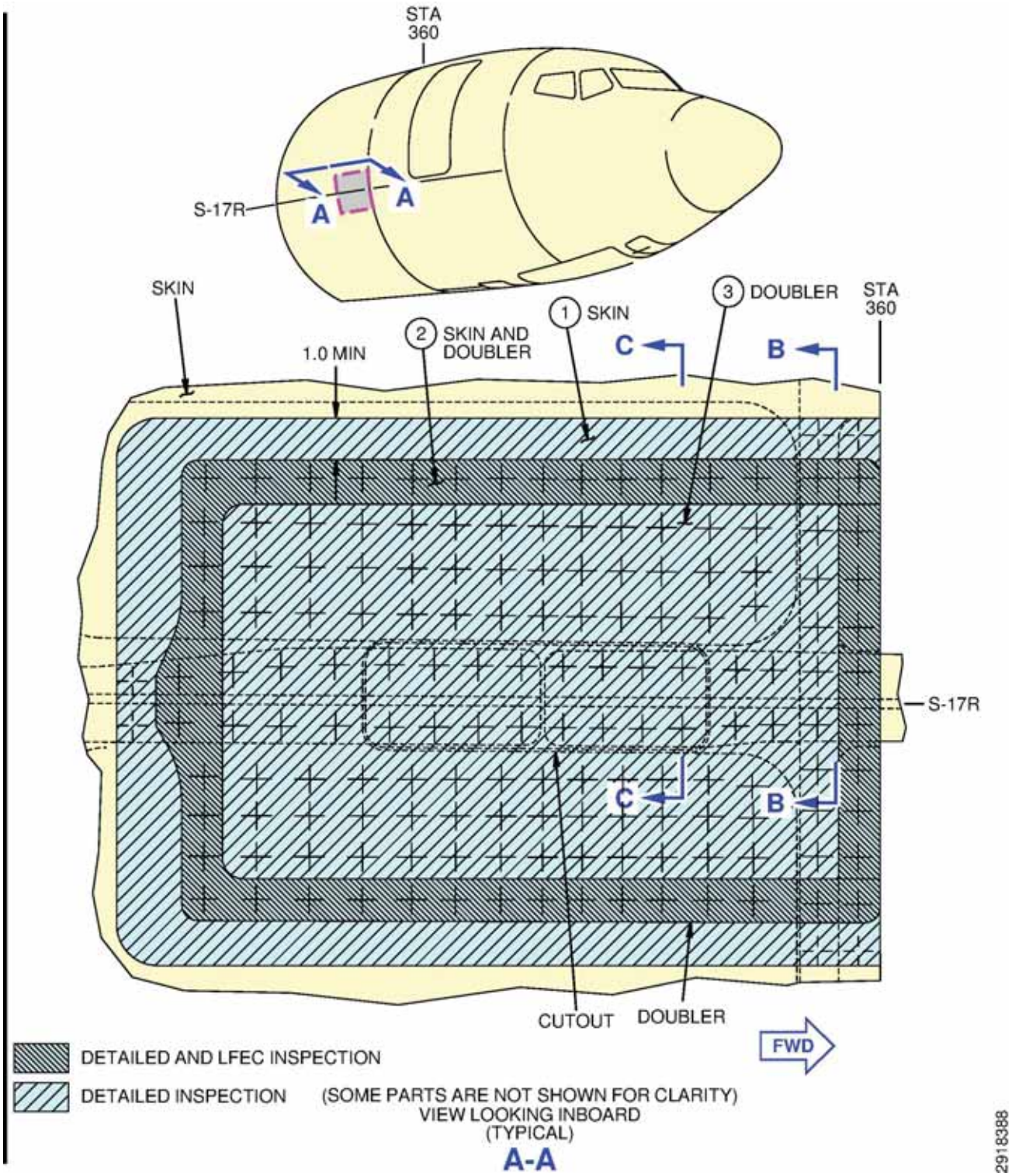

FIGURE 13: POST REPAIR INSPECTION (EXTERNAL) AT ZONE 2 (SHEET 1 OF 3)

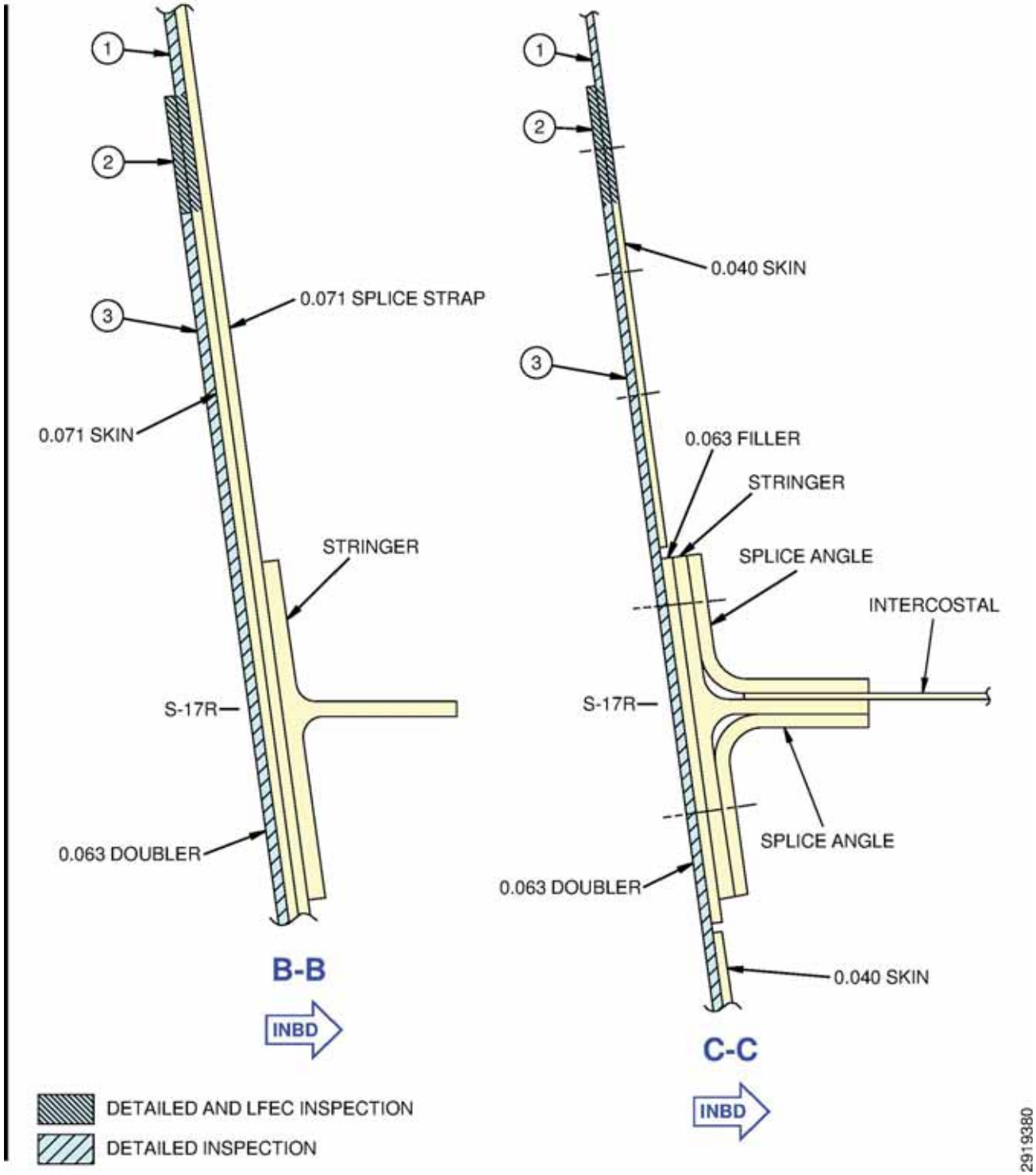

FIGURE 13: POST REPAIR INSPECTION (EXTERNAL) AT ZONE 2 (SHEET 2 OF 3)

The step numbers shown below agree with the numbers shown in the circle symbols in the figure. The QTY numbers shown below are the number of parts necessary for this figure.

Step	Task	Name	Identification	Qty	More Data
1	Inspect	SKIN	-	-	(a)
2	Inspect	SKIN	-	-	(b)
	Inspect	DOUBLER	-	-	(c)
3	Inspect	DOUBLER	-	-	(c)

(a) Do a detailed inspection of the skin around the repair doubler edge for any crack.

(b) Do a subsurface Low Frequency Eddy Current (LFEC) inspection of the skin for any crack. Inspect the skin under the doubler in accordance with 737 NDT Manual Part 6, 53-30-00, Procedure 5 or 737 NDT Manual Part 6, 51-00-26.

(c) Do a detailed inspection of the repair doubler for any crack.

FIGURE 13: POST REPAIR INSPECTION (EXTERNAL) AT ZONE 2 (SHEET 3 OF 3)

This Figure applies only to: Group 3, Configuration 3.

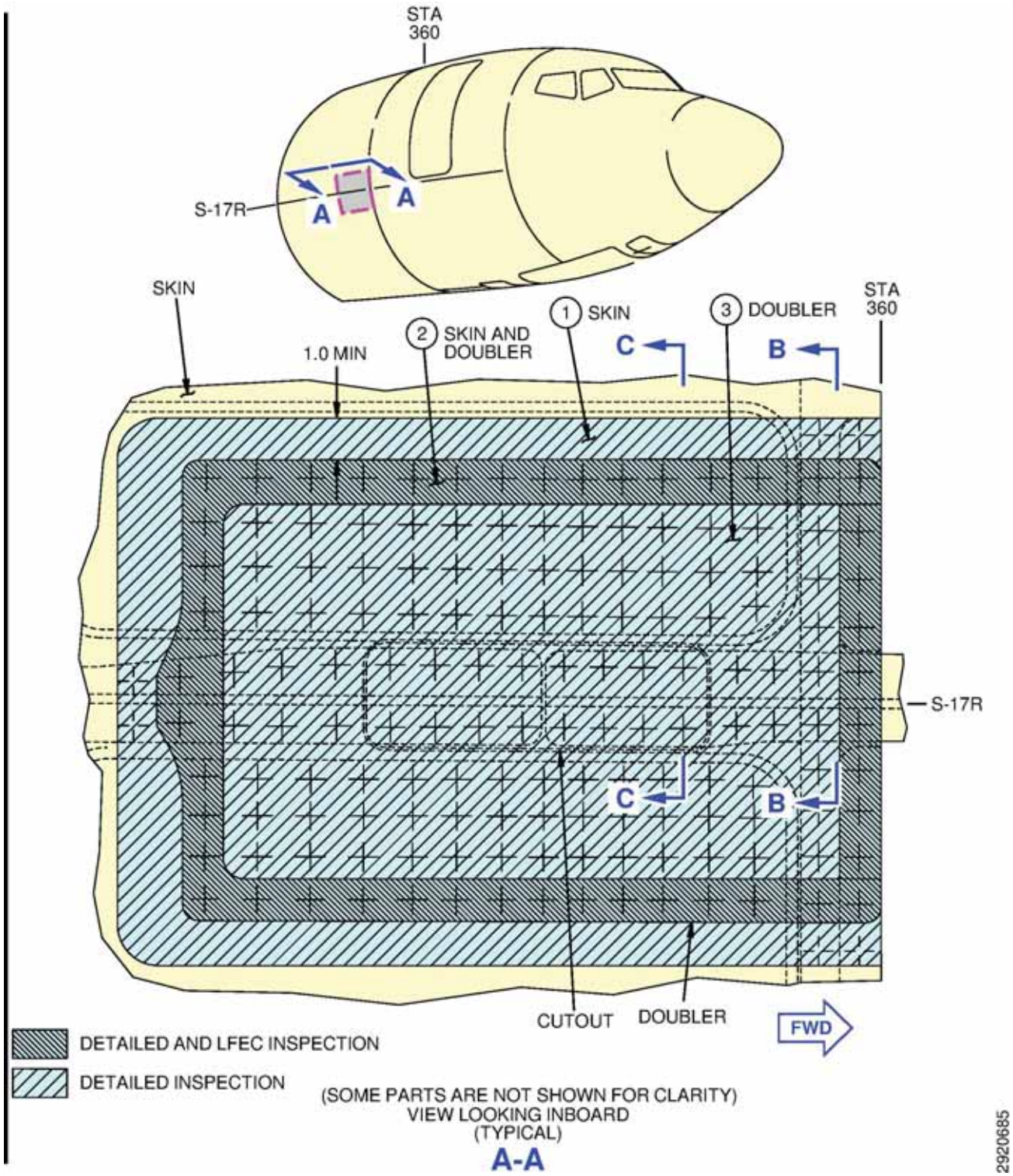

FIGURE 14: POST REPAIR INSPECTION (EXTERNAL) AT ZONE 2 (SHEET 1 OF 3)

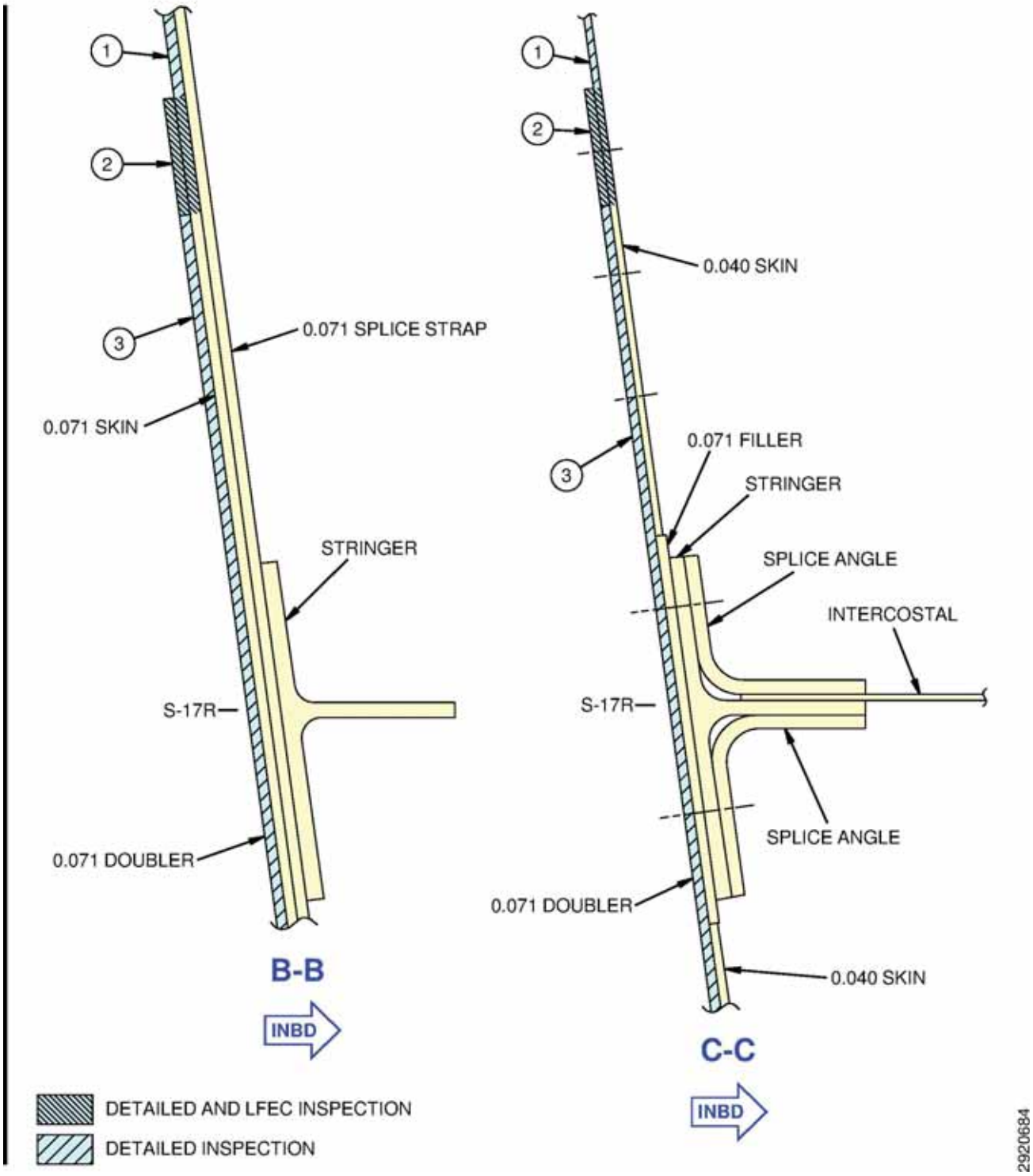

FIGURE 14: POST REPAIR INSPECTION (EXTERNAL) AT ZONE 2 (SHEET 2 OF 3)

ALERT **ALERT**

The step numbers shown below agree with the numbers shown in the circle symbols in the figure. The QTY numbers shown below are the number of parts necessary for this figure.

Step	Task	Name	Identification	Qty	More Data
1	Inspect	SKIN	-	-	(a)
2	Inspect	SKIN	-	-	(b)
	Inspect	DOUBLER	-	-	(c)
3	Inspect	DOUBLER	-	-	(c)

(a) Do a detailed inspection of the skin around the repair doubler edge for any crack.

(b) Do a subsurface Low Frequency Eddy Current (LFEC) inspection of the skin for any crack. Inspect the skin under the doubler in accordance with 737 NDT Manual Part 6, 53-30-00, Procedure 5 or 737 NDT Manual Part 6, 51-00-26.

(c) Do a detailed inspection of the repair doubler for any crack.

FIGURE 14: POST REPAIR INSPECTION (EXTERNAL) AT ZONE 2 (SHEET 3 OF 3)

This Figure applies only to: Group 1, 3, Configuration 3.

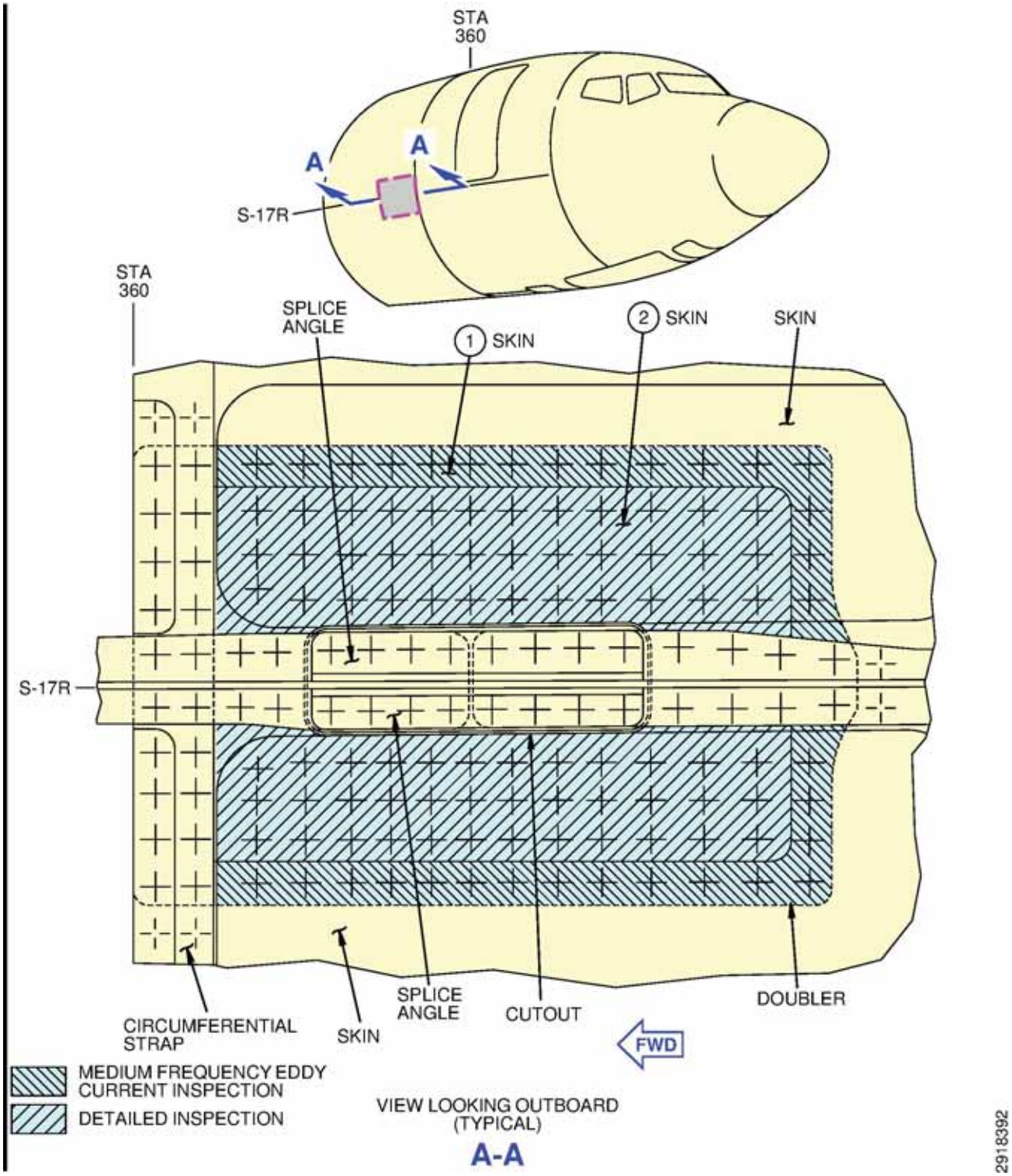

FIGURE 15: POST REPAIR INSPECTION (INTERNAL) AT ZONE 2 (SHEET 1 OF 2)

ALERT **ALERT**

The step numbers shown below agree with the numbers shown in the circle symbols in the figure. The QTY numbers shown below are the number of parts necessary for this figure.

Step	Task	Name	Identification	Qty	More Data
1	Inspect	SKIN	-	-	(a)
2	Inspect	SKIN	-	-	(b)
(a) Do a Medium Frequency Eddy Current (MFEC) inspection of the internal skin for any crack. Inspect where shown in this figure and in accordance with 737 NDT Manual Part 6, 53-30-00, Procedure 7.					
(b) Do a detailed inspection of the skin repair for any crack.					

FIGURE 15: POST REPAIR INSPECTION (INTERNAL) AT ZONE 2 (SHEET 2 OF 2)

This Figure applies only to: Group 1-3, Configuration 3.

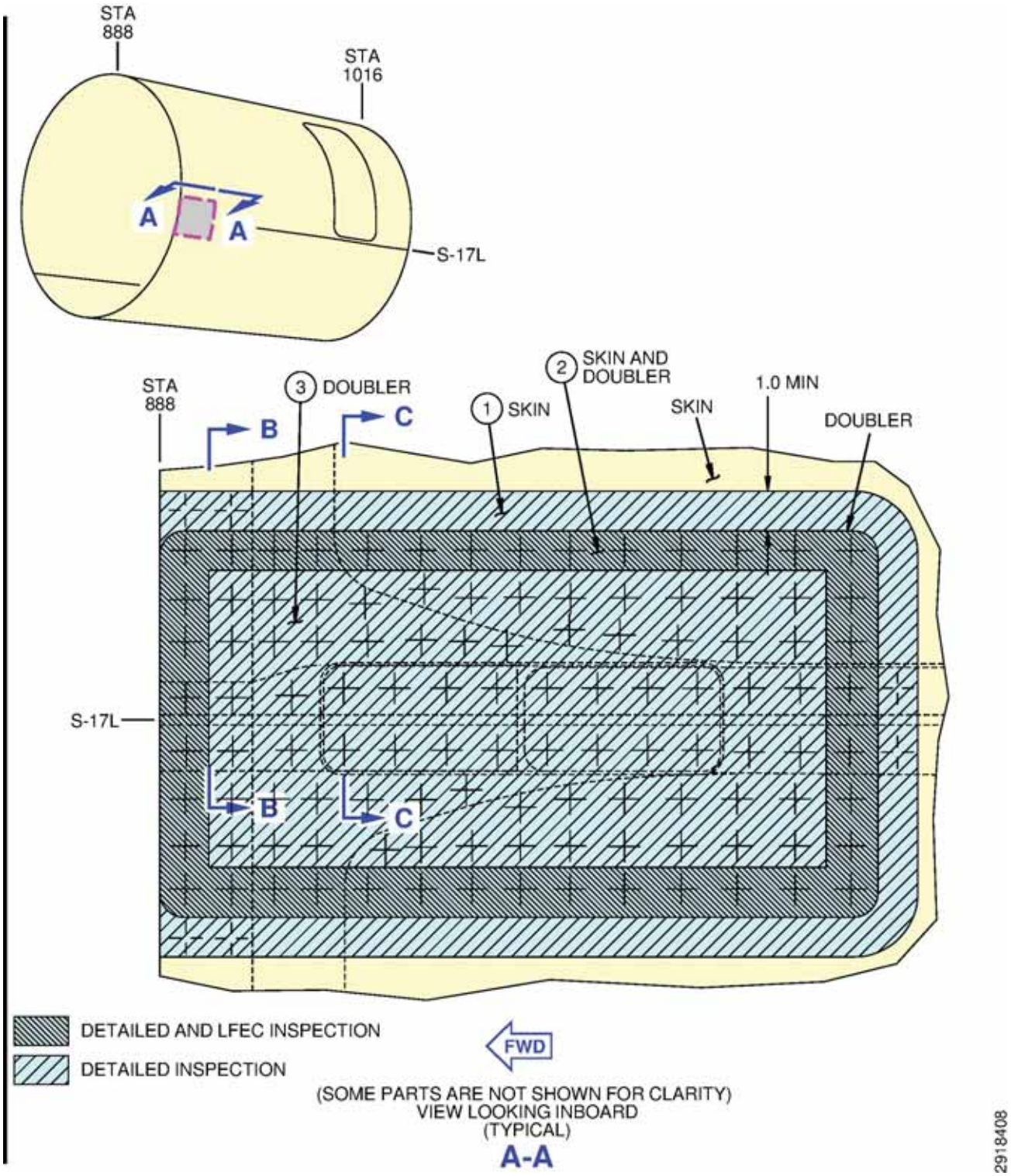

FIGURE 16: POST REPAIR INSPECTION (EXTERNAL) AT ZONE 3 (SHEET 1 OF 3)

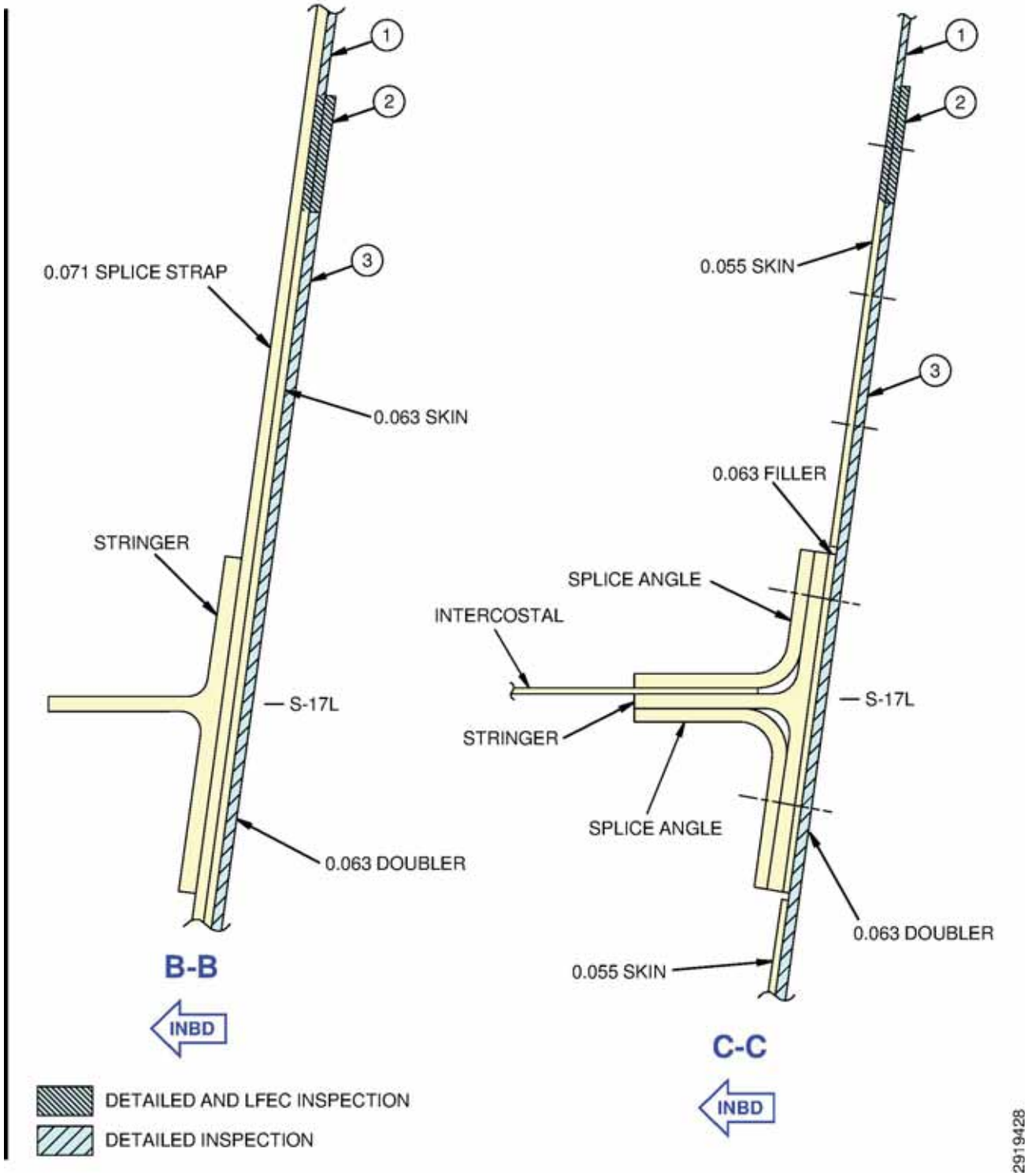

FIGURE 16: POST REPAIR INSPECTION (EXTERNAL) AT ZONE 3 (SHEET 2 OF 3)

ALERT **ALERT**

The step numbers shown below agree with the numbers shown in the circle symbols in the figure. The QTY numbers shown below are the number of parts necessary for this figure.

Step	Task	Name	Identification	Qty	More Data
1	Inspect	SKIN	-	-	(a)
2	Inspect	SKIN	-	-	(b)
	Inspect	DOUBLER	-	-	(c)
3	Inspect	DOUBLER	-	-	(c)

(a) Do a detailed inspection of the skin around the repair doubler edge for any crack. Make sure inspection area is a minimum of one inch.

(b) Do a subsurface Low Frequency Eddy Current (LFEC) inspection of the skin for any crack. Inspect the skin under the doubler in accordance with 737 NDT Manual Part 6, 53-30-00, Procedure 5 or 737 NDT Manual Part 6, 51-00-26.

(c) Do a detailed inspection of the repair doubler for any crack.

FIGURE 16: POST REPAIR INSPECTION (EXTERNAL) AT ZONE 3 (SHEET 3 OF 3)

This Figure applies only to: Group 1-3, Configuration 3.

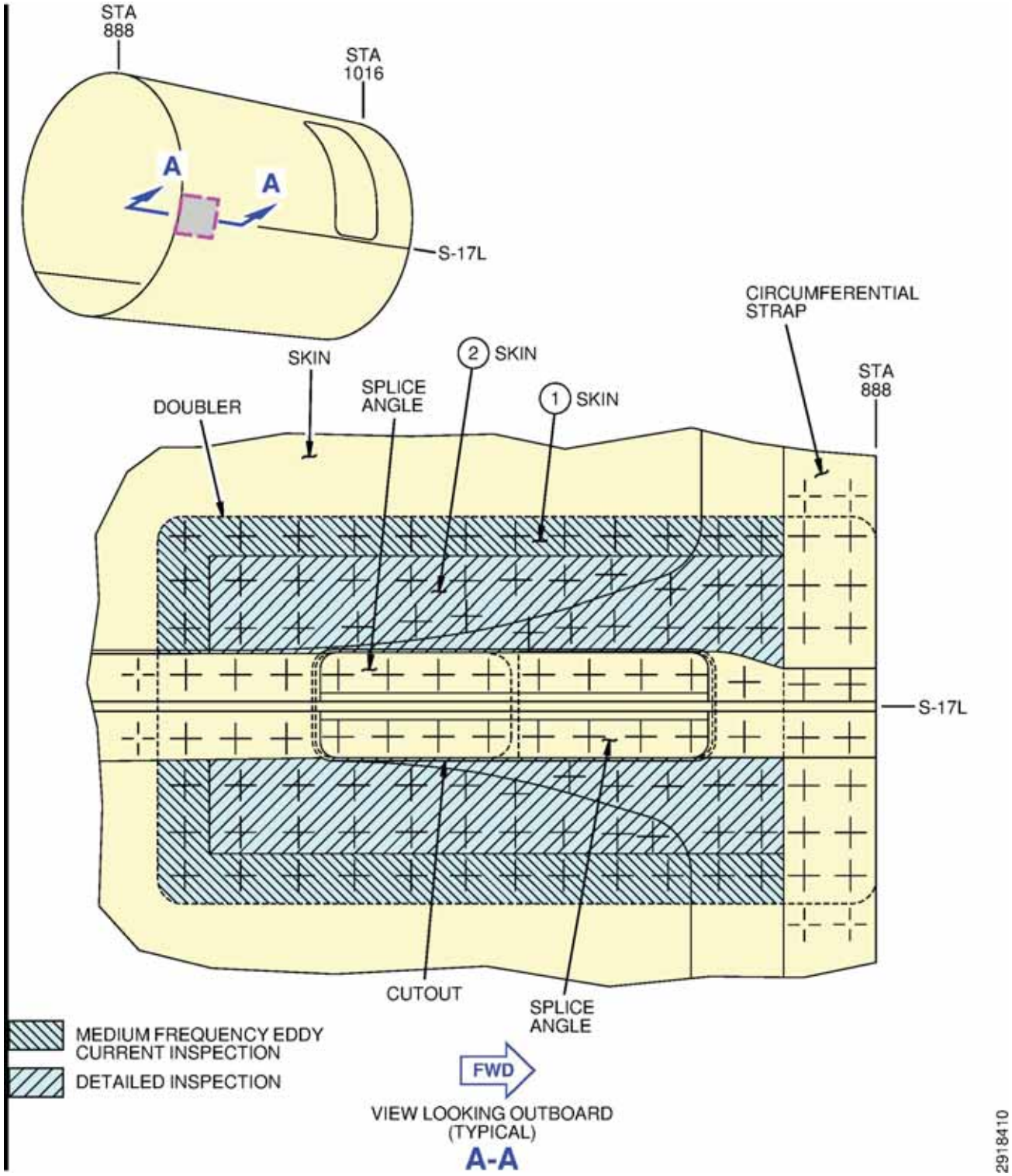

FIGURE 17: POST REPAIR INSPECTION (INTERNAL) AT ZONE 3 (SHEET 1 OF 2)

ALERT **ALERT**

The step numbers shown below agree with the numbers shown in the circle symbols in the figure. The QTY numbers shown below are the number of parts necessary for this figure.

Step	Task	Name	Identification	Qty	More Data
1	Inspect	SKIN	-	-	(a)
2	Inspect	SKIN	-	-	(b)
(a) Do a Medium Frequency Eddy Current (MFEC) inspection of the internal skin for any crack. Inspect where shown in this figure and in accordance with 737 NDT Manual Part 6, 53-30-00, Procedure 7.					
(b) Do a detailed inspection of the skin repair for any crack.					

FIGURE 17: POST REPAIR INSPECTION (INTERNAL) AT ZONE 3 (SHEET 2 OF 2)

This Figure applies only to: Group 1-3, Configuration 3.

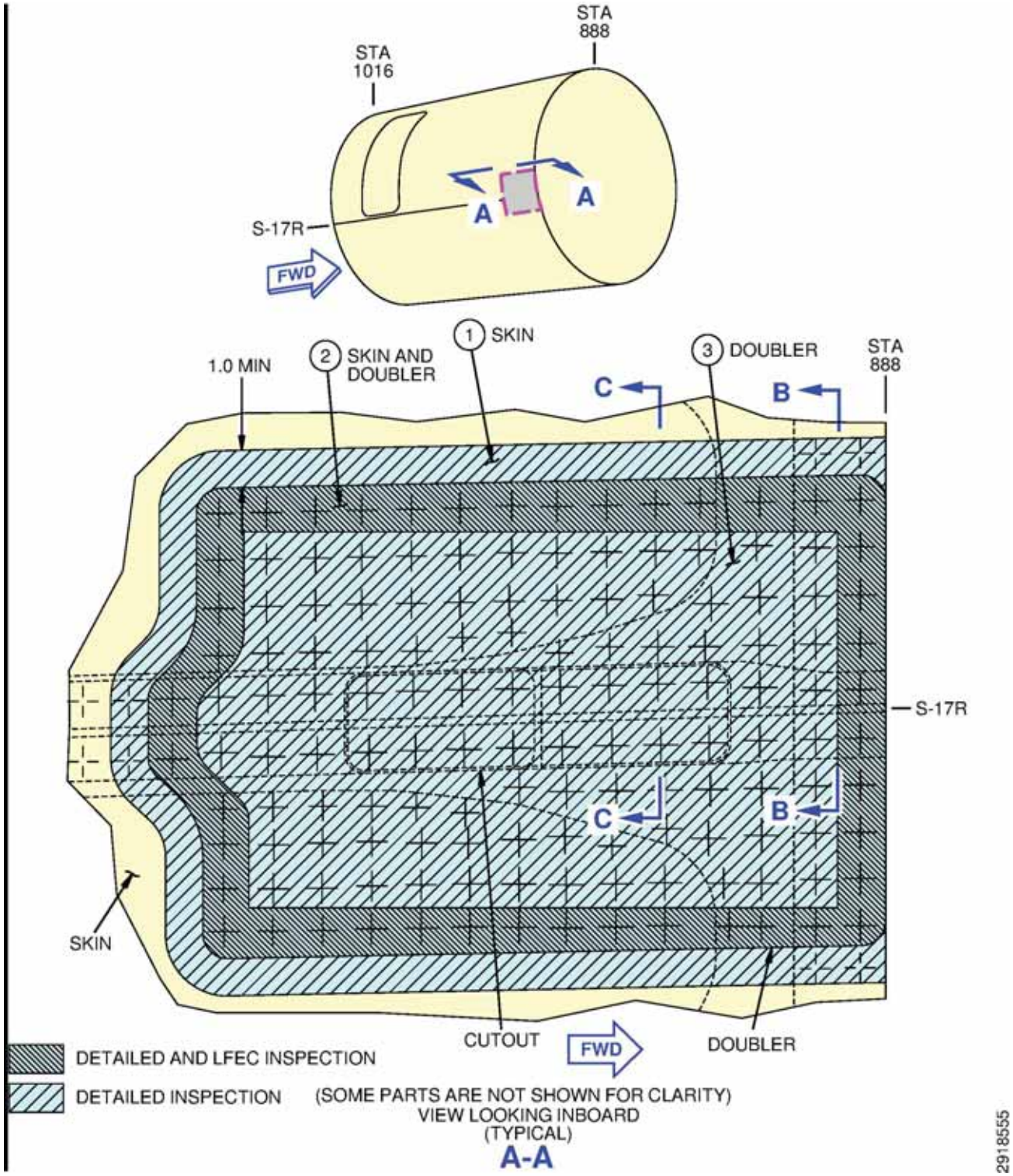

FIGURE 18: POST REPAIR INSPECTION (EXTERNAL) AT ZONE 4 (SHEET 1 OF 3)

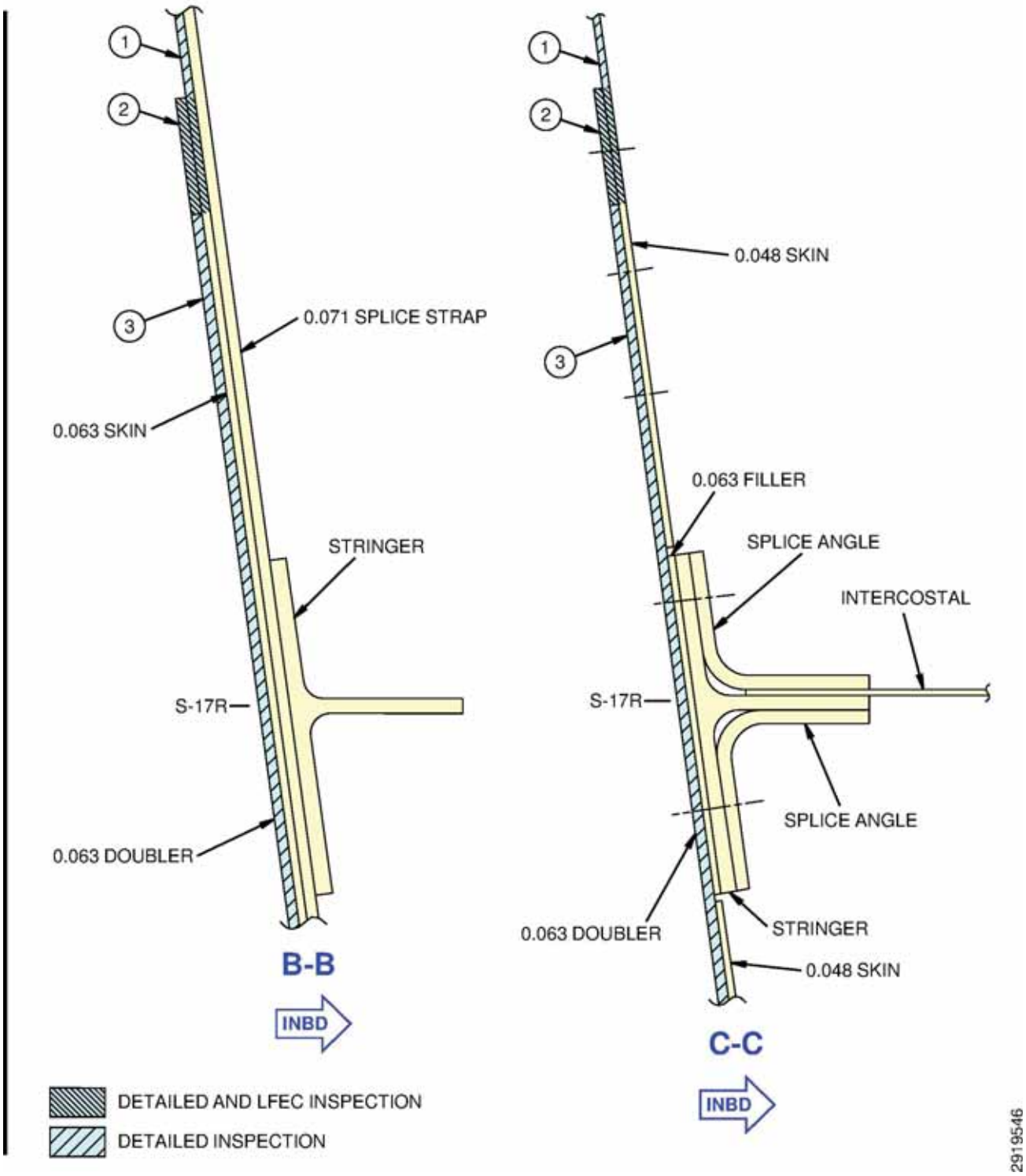

FIGURE 18: POST REPAIR INSPECTION (EXTERNAL) AT ZONE 4 (SHEET 2 OF 3)

ALERT **ALERT**

The step numbers shown below agree with the numbers shown in the circle symbols in the figure. The QTY numbers shown below are the number of parts necessary for this figure.

Step	Task	Name	Identification	Qty	More Data
1	Inspect	SKIN	-	-	(a)
2	Inspect	SKIN	-	-	(b)
	Inspect	DOUBLER	-	-	(c)
3	Inspect	DOUBLER	-	-	(c)

(a) Do a detailed inspection of the skin around the repair doubler edge for any crack.

(b) Do a subsurface Low Frequency Eddy Current (LFEC) inspection of the skin for any crack. Inspect the skin under the doubler in accordance with 737 NDT Manual Part 6, 53-30-00, Procedure 5 or 737 NDT Manual Part 6, 51-00-26.

(c) Do a detailed inspection of the repair doubler for any crack.

FIGURE 18: POST REPAIR INSPECTION (EXTERNAL) AT ZONE 4 (SHEET 3 OF 3)

This Figure applies only to: Group 1-3, Configuration 3.

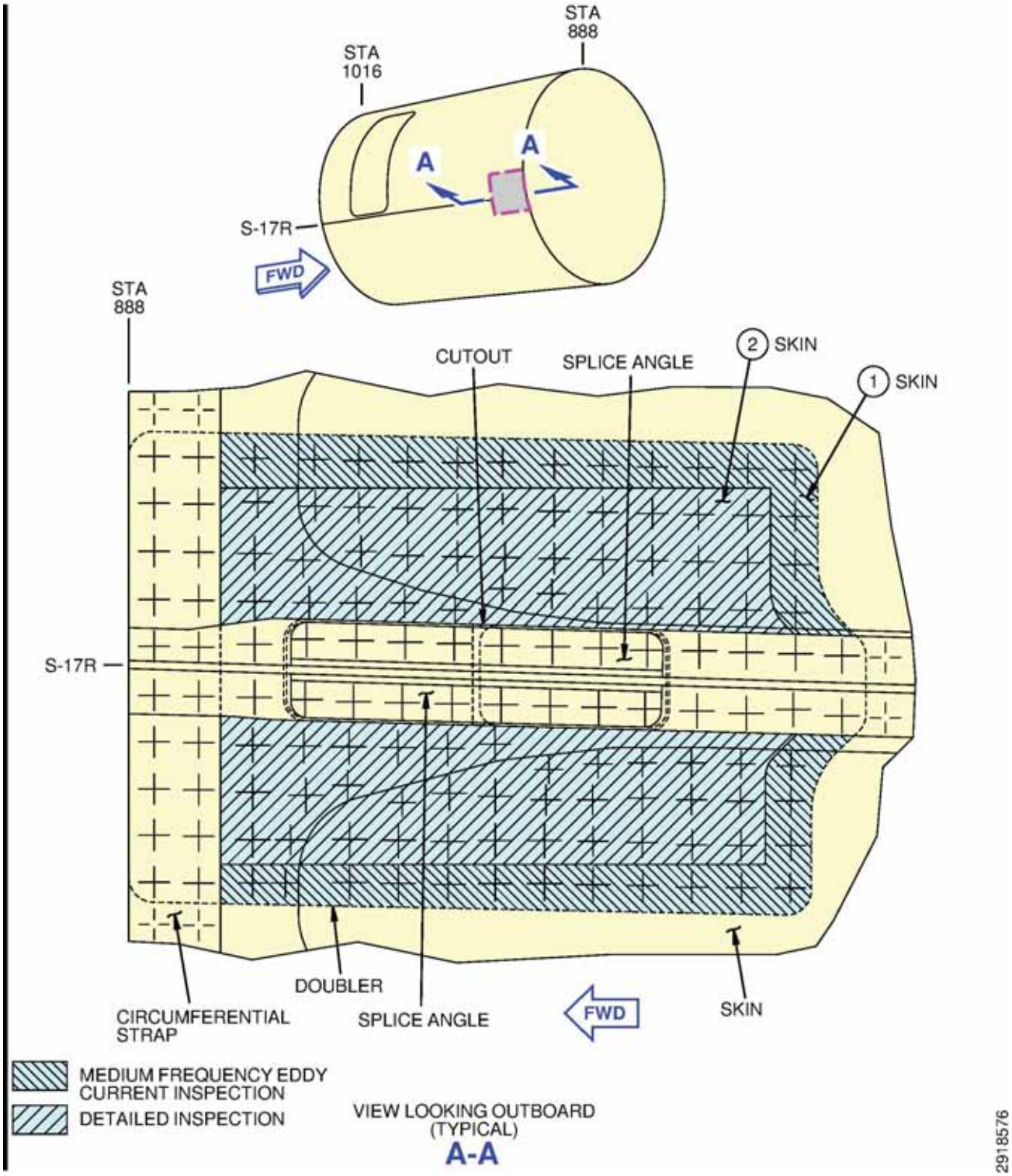

FIGURE 19: POST REPAIR INSPECTION (INTERNAL) AT ZONE 4 (SHEET 1 OF 2)

ALERT **ALERT**

The step numbers shown below agree with the numbers shown in the circle symbols in the figure. The QTY numbers shown below are the number of parts necessary for this figure.

Step	Task	Name	Identification	Qty	More Data
1	Inspect	SKIN	-	-	(a)
2	Inspect	SKIN	-	-	(b)
(a) Do a Medium Frequency Eddy Current (MFEC) inspection of the internal skin for any crack. Inspect where shown in this figure and in accordance with 737 NDT Manual Part 6, 53-30-00, Procedure 7.					
(b) Do a detailed inspection of the skin repair for any crack.					

FIGURE 19: POST REPAIR INSPECTION (INTERNAL) AT ZONE 4 (SHEET 2 OF 2)

ALERT **ALERT**

Logic diagrams are provided as an aid only. Information contained in Paragraph 1.E., Compliance is the primary source for compliance times. Information contained in Paragraph 3.B., Work Instructions is the primary source for tasks required for compliance.

1. The table below gives the description for the parts and conditions called out in the logic diagrams.

Title	Description
PART 1	HIGH FREQUENCY EDDY CURRENT (HFEC) INSPECTION OF THE SKIN AT ZONE 1, ZONE 2, ZONE 3 AND ZONE 4.
PART 2	SKIN REPAIR AT ZONE 1.
PART 3	SKIN REPAIR AT ZONE 2.
PART 4	SKIN REPAIR AT ZONE 3.
PART 5	SKIN REPAIR AT ZONE 4.
PART 6	TERMINATING ACTION AT ZONE 1, ZONE 2, ZONE 3 AND ZONE 4.
CONDITION 1	ANY CRACK FOUND WITHIN ZONE 1.
CONDITION 2	ANY CRACK FOUND WITHIN ZONE 2.
CONDITION 3	ANY CRACK FOUND WITHIN ZONE 3.
CONDITION 4	ANY CRACK FOUND WITHIN ZONE 4.
CONDITION 5	NO CRACK FOUND.
CONDITION 6	NO CRACK FOUND.

2. The table below gives the description for the flag notes called out in the logic diagram.

Flag Note Letter	Description
(a)	It is not required to do the HFEC Skin Inspections for Zone 1 for airplanes converted into 737-800BCF under project number TS14-0042 that have incorporated Boeing drawing 800A0003 specified in the Type Certificate Data Sheet A16WE.
(b)	Refer to Compliance Table 3 for post repair inspections.
(c)	Only applicable to airplanes that have not converted into 737-800BCF under project number TS14-0042 and have not incorporated Boeing drawing 800A0003 specified in the Type Certificate Data Sheet A16WE.
(d)	Only applicable to airplanes that have converted into 737-800BCF under project number TS14-0042 that have incorporated Boeing drawing 800A0003 specified in the Type Certificate Data Sheet A16WE.
(e)	Refer to Compliance Table 4 for post repair inspections.
(f)	Refer to Compliance Table 5 for post repair inspections.
(g)	Refer to Compliance Table 6 for post repair inspections.

APPENDIX A: LOGIC DIAGRAM FOR PARAGRAPH 1.E., COMPLIANCE TABLE 1: HIGH FREQUENCY EDDY CURRENT (HFEC) INSPECTION AT ZONE 1, ZONE 2, ZONE 3 AND ZONE 4 (SHEET 1 OF 4)

Flag Note Letter	Description
(h)	Accomplishment of PART 6: TERMINATING ACTION AT ZONE 1, ZONE 2, ZONE 3 AND ZONE 4 is terminating action to the repeat inspections at that zone location.

APPENDIX A: LOGIC DIAGRAM FOR PARAGRAPH 1.E., COMPLIANCE TABLE 1: HIGH FREQUENCY EDDY CURRENT (HFEC) INSPECTION AT ZONE 1, ZONE 2, ZONE 3 AND ZONE 4 (SHEET 2 OF 4)

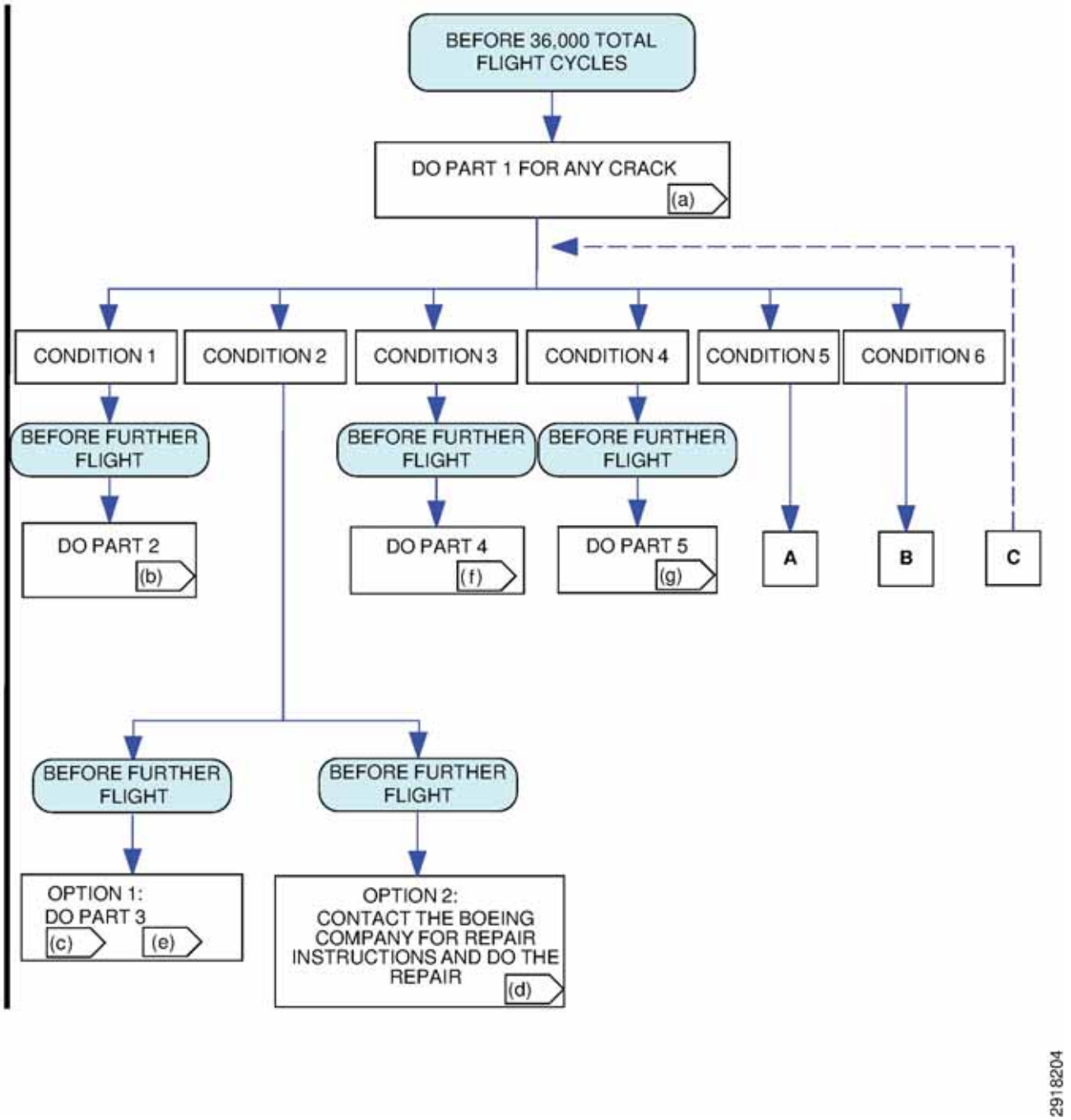

APPENDIX A: LOGIC DIAGRAM FOR PARAGRAPH 1.E., COMPLIANCE TABLE 1: HIGH FREQUENCY EDDY CURRENT (HFEC) INSPECTION AT ZONE 1, ZONE 2, ZONE 3 AND ZONE 4 (SHEET 3 OF 4)

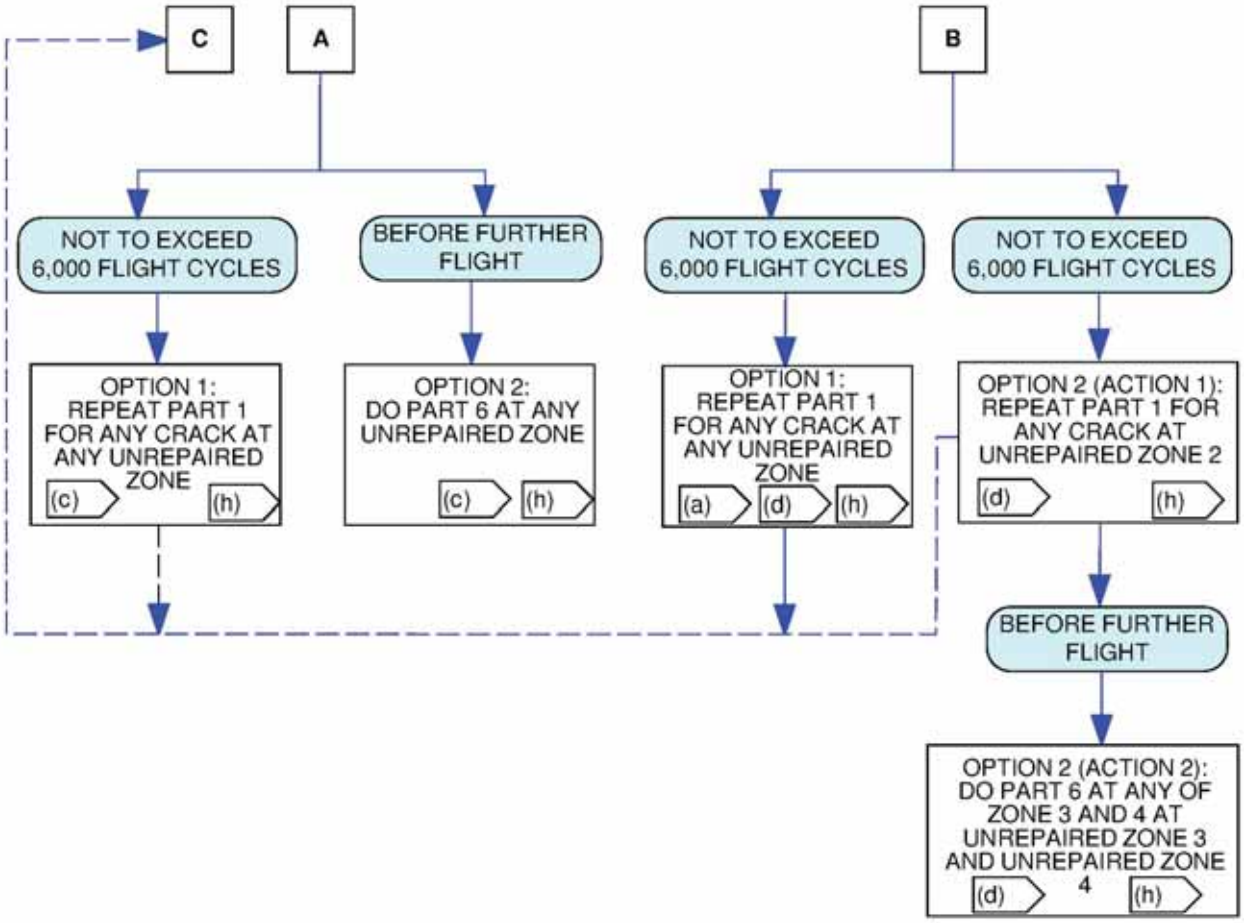

2918205

APPENDIX A: LOGIC DIAGRAM FOR PARAGRAPH 1.E., COMPLIANCE TABLE 1: HIGH FREQUENCY EDDY CURRENT (HFEC) INSPECTION AT ZONE 1, ZONE 2, ZONE 3 AND ZONE 4 (SHEET 4 OF 4)

ALERT **ALERT**

Logic diagrams are provided as an aid only. Information contained in Paragraph 1.E., Compliance is the primary source for compliance times. Information contained in Paragraph 3.B., Work Instructions is the primary source for tasks required for compliance.

1. The table below gives the description for the parts and conditions called out in the logic diagrams.

Title	Description
PART 7	HIGH FREQUENCY EDDY CURRENT (HFEC) INSPECTION OF THE SKIN AT ZONE 3 AND ZONE 4.
PART 4	SKIN REPAIR AT ZONE 3.
PART 5	SKIN REPAIR AT ZONE 4.
PART 8	TERMINATING ACTION AT ZONE 3 AND ZONE 4.
CONDITION 7	ANY CRACK FOUND WITHIN ZONE 3.
CONDITION 8	ANY CRACK FOUND WITHIN ZONE 4.
CONDITION 9	NO CRACK FOUND.

2. The table below gives the description for the flag notes called out in the logic diagram.

Flag Note Letter	Description
(a)	Refer to Compliance Table 5 for post repair inspections.
(b)	Refer to Compliance Table 6 for post repair inspections.
(c)	Accomplishment of PART 8: TERMINATING ACTION AT ZONE 3 AND ZONE 4 is terminating action to the repeat inspections at that zone location.

APPENDIX B: LOGIC DIAGRAM FOR PARAGRAPH 1.E., COMPLIANCE TABLE 2: HIGH FREQUENCY EDDY CURRENT (HFEC) INSPECTION ZONE 3 AND ZONE 4 (SHEET 1 OF 2)

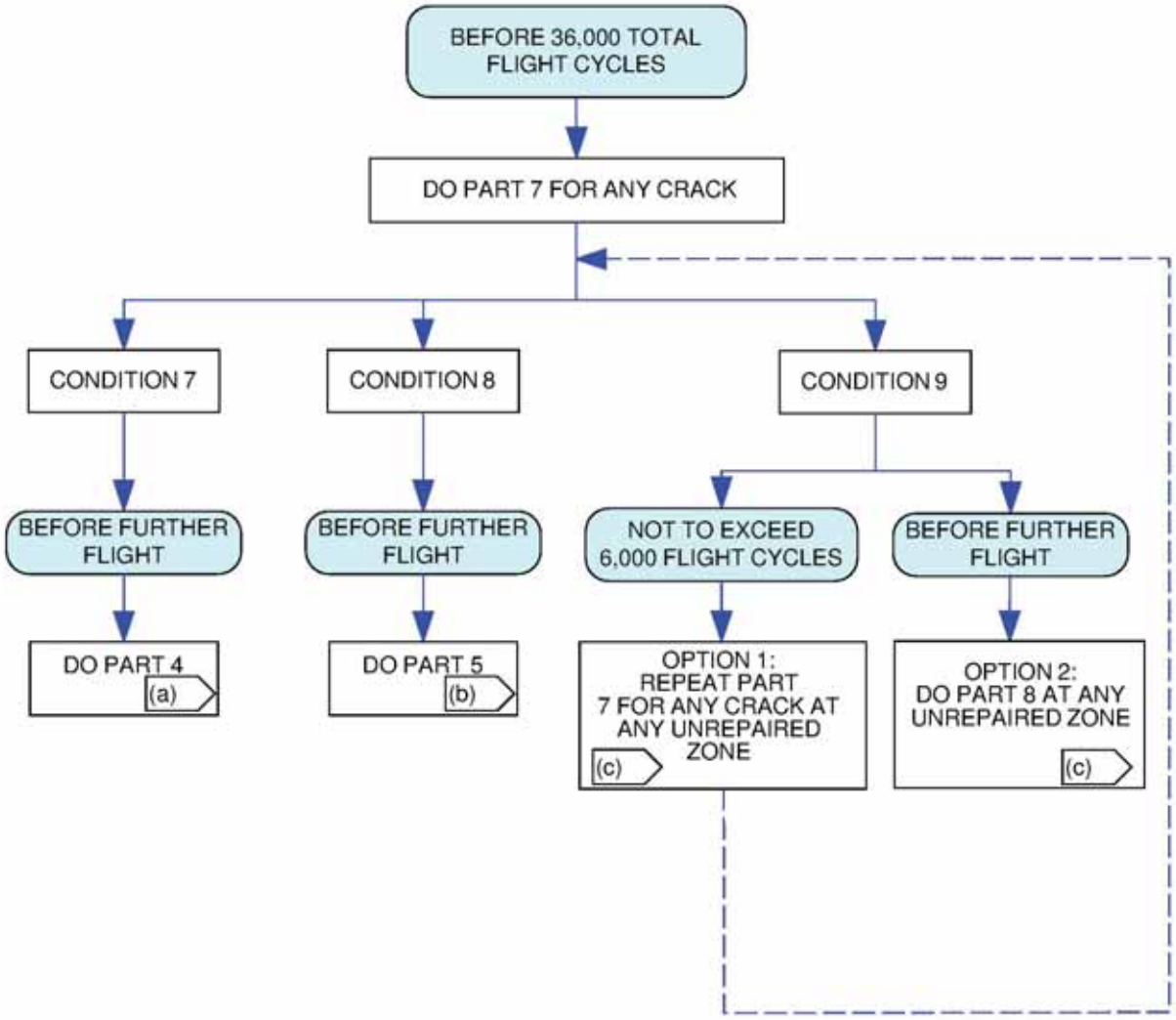

2918206

APPENDIX B: LOGIC DIAGRAM FOR PARAGRAPH 1.E., COMPLIANCE TABLE 2: HIGH FREQUENCY EDDY CURRENT (HFEC) INSPECTION ZONE 3 AND ZONE 4 (SHEET 2 OF 2)

ALERT **ALERT**

Logic diagrams are provided as an aid only. Information contained in Paragraph 1.E., Compliance is the primary source for compliance times. Information contained in Paragraph 3.B., Work Instructions is the primary source for tasks required for compliance.

1. The table below gives the description for the parts and conditions called out in the logic diagrams.

Title	Description
PART 9	EXTERNAL DETAILED INSPECTION AND LOW FREQUENCY EDDY CURRENT (LFEC) INSPECTION OF THE SKIN REPAIR AT ZONE 1.
PART 10	INTERNAL DETAILED AND MEDIUM FREQUENCY EDDY CURRENT (MFEC) INSPECTION OF THE SKIN REPAIR AT ZONE 1.
CONDITION 10	ANY CRACK FOUND.
CONDITION 11	NO CRACK FOUND.

APPENDIX C: LOGIC DIAGRAM FOR PARAGRAPH 1.E., COMPLIANCE TABLE 3: POST REPAIR INSPECTIONS AT ZONE 1 (SHEET 1 OF 3)

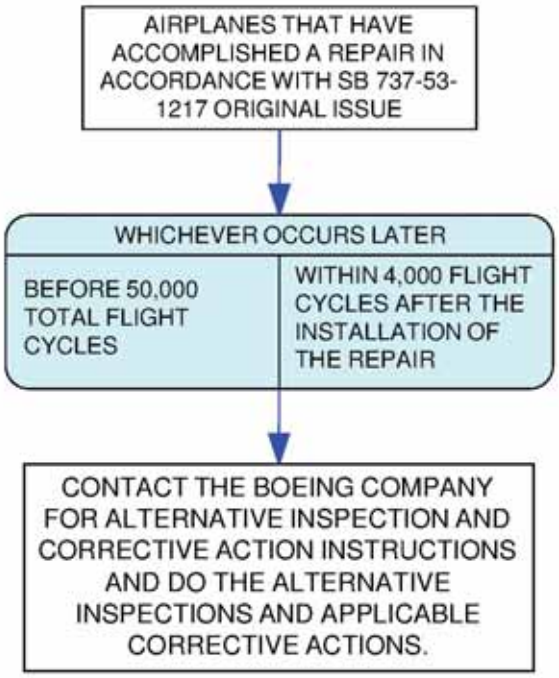

2918209

APPENDIX C: LOGIC DIAGRAM FOR PARAGRAPH 1.E., COMPLIANCE TABLE 3: POST REPAIR INSPECTIONS AT ZONE 1 (SHEET 2 OF 3)

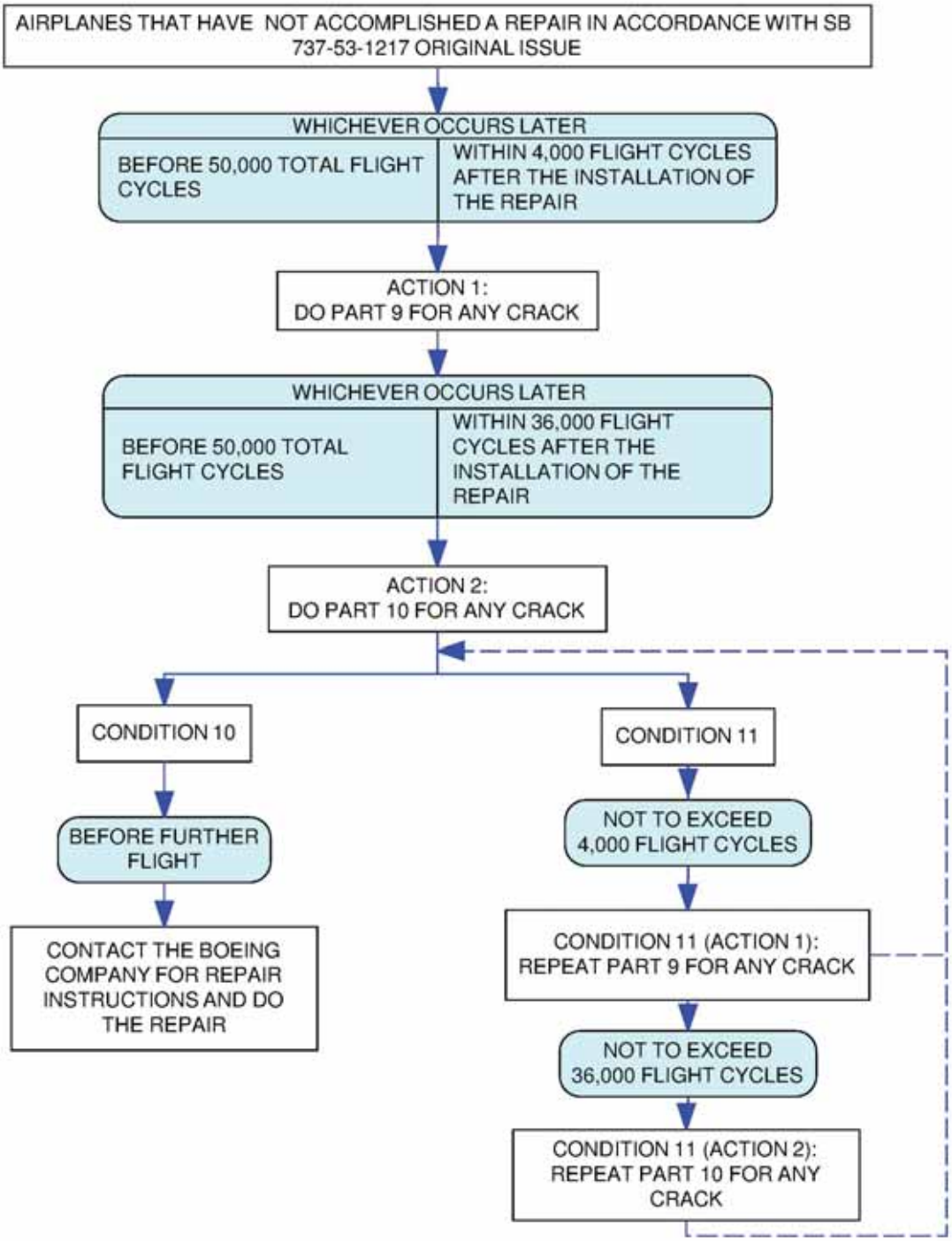

APPENDIX C: LOGIC DIAGRAM FOR PARAGRAPH 1.E., COMPLIANCE TABLE 3: POST REPAIR INSPECTIONS AT ZONE 1 (SHEET 3 OF 3)

ALERT **ALERT**

Logic diagrams are provided as an aid only. Information contained in Paragraph 1.E., Compliance is the primary source for compliance times. Information contained in Paragraph 3.B., Work Instructions is the primary source for tasks required for compliance.

1. The table below gives the description for the parts and conditions called out in the logic diagrams.

Title	Description
PART 11	EXTERNAL DETAILED INSPECTION AND LOW FREQUENCY EDDY CURRENT (LFEC) INSPECTION OF THE SKIN REPAIR AT ZONE 2.
PART 12	INTERNAL DETAILED AND MEDIUM FREQUENCY EDDY CURRENT (MFEC) INSPECTION OF THE SKIN REPAIR AT ZONE 2.
CONDITION 12	ANY CRACK FOUND.
CONDITION 13	NO CRACK FOUND.

APPENDIX D: LOGIC DIAGRAM FOR PARAGRAPH 1.E., COMPLIANCE TABLE 4: POST REPAIR INSPECTIONS AT ZONE 2 (SHEET 1 OF 3)

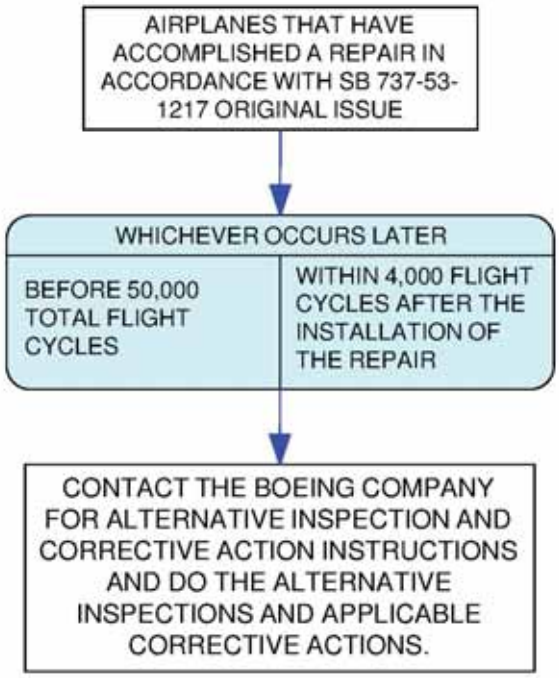

2918211

APPENDIX D: LOGIC DIAGRAM FOR PARAGRAPH 1.E., COMPLIANCE TABLE 4: POST REPAIR INSPECTIONS AT ZONE 2 (SHEET 2 OF 3)

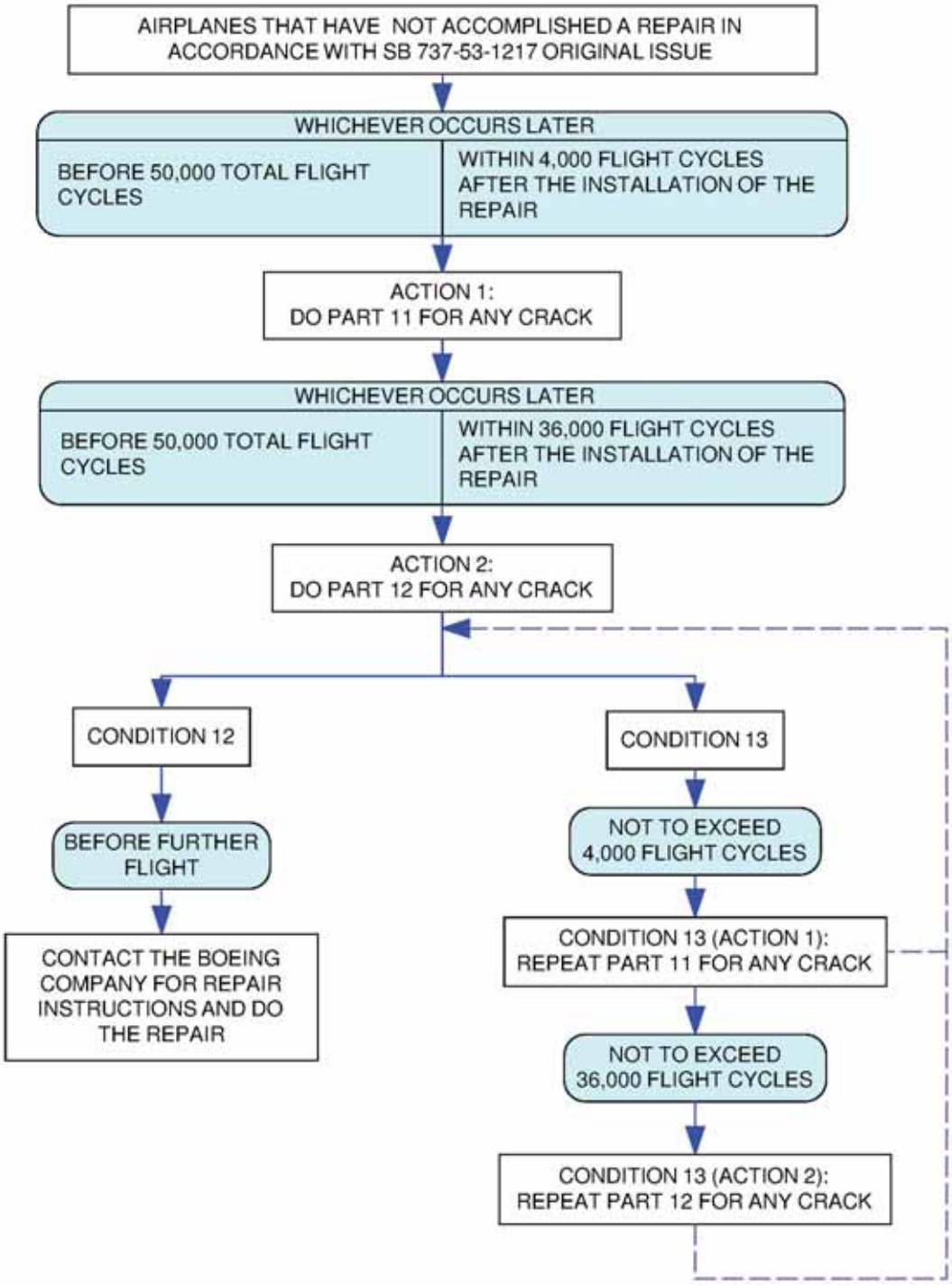

APPENDIX D: LOGIC DIAGRAM FOR PARAGRAPH 1.E., COMPLIANCE TABLE 4: POST REPAIR INSPECTIONS AT ZONE 2 (SHEET 3 OF 3)

ALERT **ALERT**

Logic diagrams are provided as an aid only. Information contained in Paragraph 1.E., Compliance is the primary source for compliance times. Information contained in Paragraph 3.B., Work Instructions is the primary source for tasks required for compliance.

1. The table below gives the description for the parts and conditions called out in the logic diagrams.

Title	Description
PART 13	EXTERNAL DETAILED INSPECTION AND LOW FREQUENCY EDDY CURRENT (LFEC) INSPECTION OF THE SKIN REPAIR AT ZONE 3.
PART 14	INTERNAL DETAILED AND MEDIUM FREQUENCY EDDY CURRENT (MFEC) INSPECTION OF THE SKIN REPAIR AT ZONE 3.
CONDITION 14	ANY CRACK FOUND.
CONDITION 15	NO CRACK FOUND.

APPENDIX E: LOGIC DIAGRAM FOR PARAGRAPH 1.E., COMPLIANCE TABLE 5: POST REPAIR INSPECTIONS AT ZONE 3 (SHEET 1 OF 3)

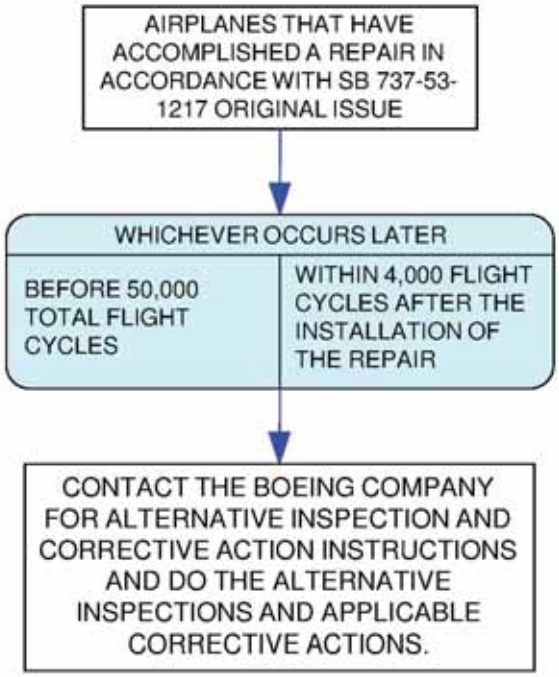

2918212

APPENDIX E: LOGIC DIAGRAM FOR PARAGRAPH 1.E., COMPLIANCE TABLE 5: POST REPAIR INSPECTIONS AT ZONE 3 (SHEET 2 OF 3)

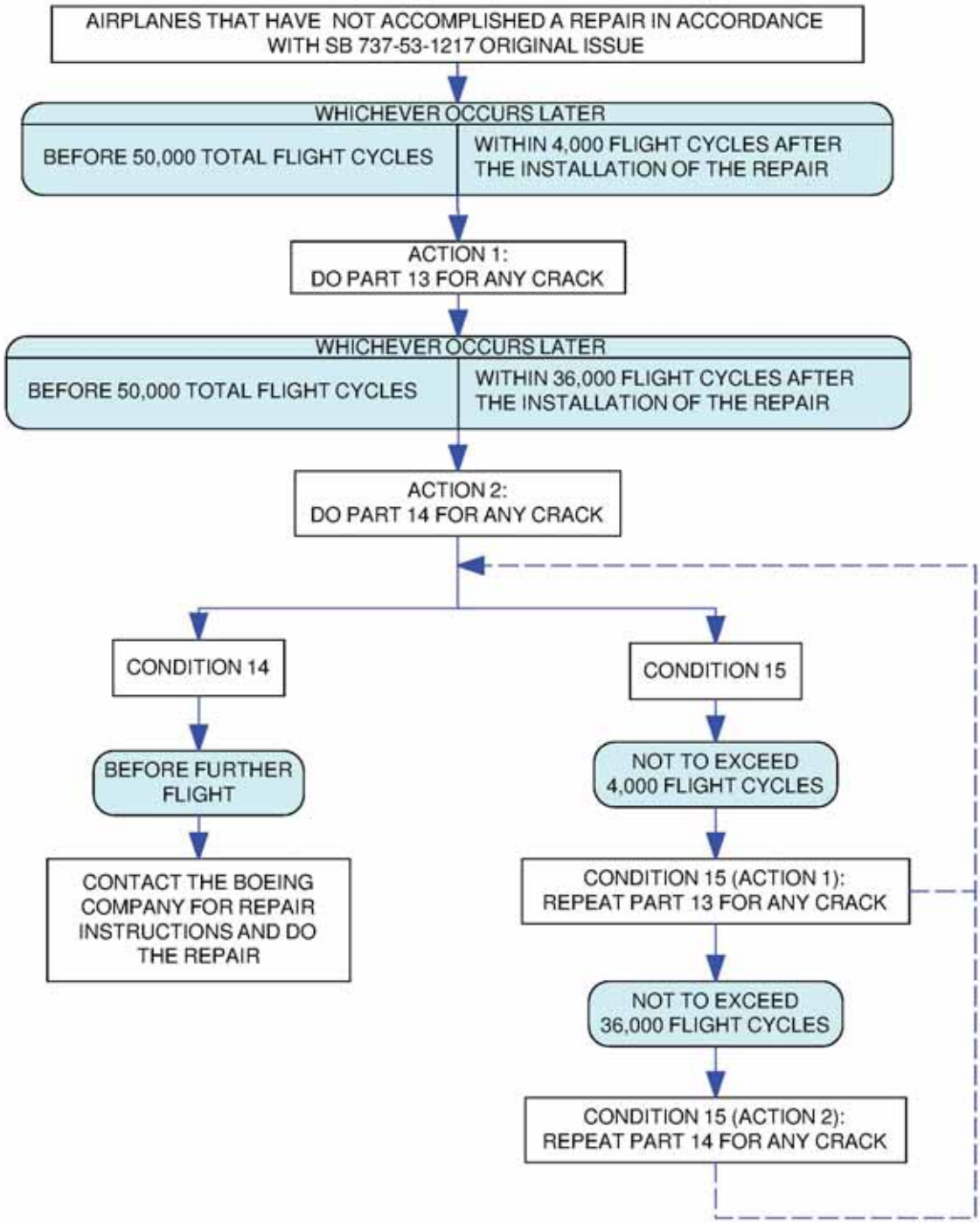

APPENDIX E: LOGIC DIAGRAM FOR PARAGRAPH 1.E., COMPLIANCE TABLE 5: POST REPAIR INSPECTIONS AT ZONE 3 (SHEET 3 OF 3)

ALERT **ALERT**

Logic diagrams are provided as an aid only. Information contained in Paragraph 1.E., Compliance is the primary source for compliance times. Information contained in Paragraph 3.B., Work Instructions is the primary source for tasks required for compliance.

1. The table below gives the description for the parts and conditions called out in the logic diagrams.

Title	Description
PART 15	EXTERNAL DETAILED INSPECTION AND LOW FREQUENCY EDDY CURRENT (LFEC) INSPECTION OF THE SKIN REPAIR AT ZONE 4.
PART 16	INTERNAL DETAILED AND MEDIUM FREQUENCY EDDY CURRENT (MFEC) INSPECTION OF THE SKIN REPAIR AT ZONE 4.
CONDITION 16	ANY CRACK FOUND.
CONDITION 17	NO CRACK FOUND.

APPENDIX F: LOGIC DIAGRAM FOR PARAGRAPH 1.E., COMPLIANCE TABLE 6: POST REPAIR INSPECTIONS AT ZONE 4 (SHEET 1 OF 3)

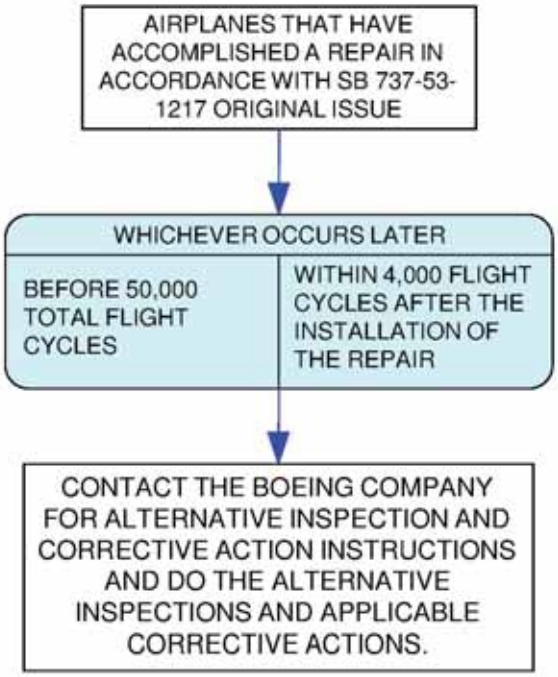

2997665

APPENDIX F: LOGIC DIAGRAM FOR PARAGRAPH 1.E., COMPLIANCE TABLE 6: POST REPAIR INSPECTIONS AT ZONE 4 (SHEET 2 OF 3)

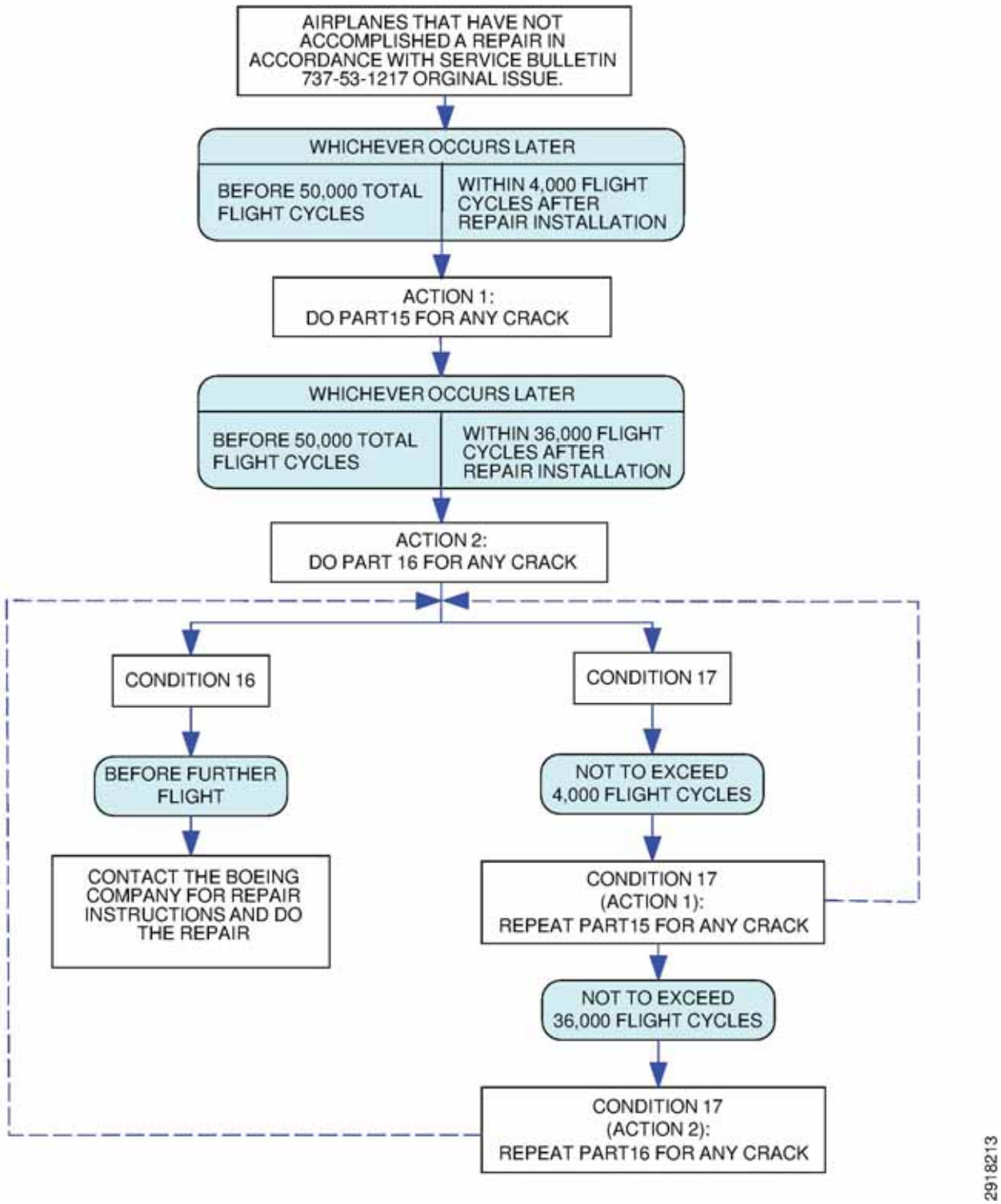

APPENDIX F: LOGIC DIAGRAM FOR PARAGRAPH 1.E., COMPLIANCE TABLE 6: POST REPAIR INSPECTIONS AT ZONE 4 (SHEET 3 OF 3)