Downloaded from http://www.everyspec.com

MIL-STD-1290A(AV)
26 September 1988
Superseding
MIL-STD-1290(AV)
25 January 1974

MILITARY STANDARD

LIGHT FIXED AND ROTARY-WING AIRCRAFT

CRASH RESISTANCE

AMSC Code N/A
FSC 15GP

DISTRIBUTION STATEMENT A: Approved for public release; distribution is unlimited

Downloaded from http://www.everyspec.com

DEPARTMENT OF DEFENSE

WASHINGTON, DC 20301

Light Fixed and Rotary-Wing Aircraft Crash Resistance

1. This military standard is approved for use by all Departments and Agencies of the Department of Defense.

2. Beneficial comments (recommendations, additions, deletions) and any pertinent data which may be of use in improving this document should be addressed to: Commander, U.S. Army Aviation Systems Command ATTN: AMSAV-ELSS, 4300 Goodfellow Boulevard, St, Louis, MO 63120-1798, by using the self addressed Standardization Document Improvement Proposal (DD Form 1426) appearing at the end of this document or by letter.

Downloaded from http://www.everyspec.com

FOREWORD

This military standard was prepared by the Safety and Survivability Technical Area of the Aeronautical Systems Division, Aviation Applied Technology Directorate, US Army Research and Technology Activity (AVSCOM), Fort Eustis, Virginia 23604-5577.

A major portion of the document is the product of extensive research in aircraft crash resistance sponsored by this laboratory over the past 23 years. The document is based largely on the design criteria of USARTL TR 79-22 A thru E "Aircraft Crash Survival Design Guide."

Downloaded from http://www.everyspec.com

CONTENTS

			Page
Paragraph	1	SCOPE	1
	1.1	Purpose	1
	1.2	Classification	1
	2.	REFERENCED DOCUMENTS	1
	2.1	Government documents	1
	2.1.1	Specifications and standards, and handbooks	1
	2.1.2	Other government documents, drawings and publications	1
	2.2	Order of precedence	2
	3.	DEFINITIONS	2
	3.1	Abrupt accelerations	2
	3.2	Aircraft crashworthiness	2
	3.3	Ancillary equipment	2
	3.4	Collapse	2
	3.5	Deceleration	2
	3.6	ΔV	2
	3.7	Ditching	2
	3.8	Drip fence	2
	3.9	Dynamic overshoot	2
	3.10	Environmental hazards	3
	3.10.1	Primary members	3
	3.10.2	Secondary members	3
	3.10.3	Tertiary members	3
	3.11	Exit closure	3
	3.12	Failure	3
	3.13	Fire curtain	3
	3.14	Fire resistant	3
	3.15	Firewall	3
	3.16	Flammable fluids	3
	3.17	Flow diverter	3
	3.18	Frangible attachment	3
	3.19	G	3
	3.20	G_{avg}	4
	3.21	impact area	4
	3.22	Incapacitated	4
	3.23	Load limiter	4
	3.24	Major impact	4
	3.25	Occupant acceleration environment	4
	3.26	Postcrash hazard	4
	3.27	Rate of onset	4

Downloaded from http://www.everyspec.com

			Page
Paragraph	3.28	Retention strength	4
	3.29	Self-sealing breakaway valve	4
	3.30	Static strength	5
	3.31	Strike envelope	5
	3.32	Structural deformation	5
	3.33	Structural integrity	5
	3.34	Survivable accident	5
	4.	GENERAL REQUIREMENTS	5
	4.1	System crash resistance	5
	4.2	Design impact conditions	5
	4.3	General crash survivability design factors	5
	4.4	System testing	6
	4.5	Aircraft coordinates	6
	5.	DETAIL REQUIREMENTS	6
	5.1	Aircraft crash resistance	6
	5.1.1	Longitudinal (ΔV_x) impacts	7
	5.1.1.1	Impact conditions	7
	5.1.1.2	Earth scooping effects	7
	5.1.1.3	Buckling effects	7
	5.1.1.4	Floor	8
	5.1.2	Vertical (ΔV_z) impacts	8
	5.1.2.1	Impact conditions	8
	5.1.2.2	Design techniques	8
	5.1.3	Lateral (ΔV_y) impacts	8
	5.1.4	Combined impacts	8
	5.1.5	Rollover impacts	9
	5.1.6	Wings	9
	5.1.7	Landing gear	9
	5.1.8	High mass retention	10
	5.1.8.1	Type I aircraft	10
	5.1.8.2	Type II aircraft	10
	5.2	Occupant retention	11
	5.2.1	Seating systems	11
	5.2.1.1	Pilot and copilot	11
	5.2.1.2	Cabin	11
	5.2.2	Litters	11
	5.2.2.1	Orientation	11
	5.2.2.2	Materials	11
	5.2.2.3	Support structure	12
	5.2.2.4	Attachment to airframe	12
	5.2.2.5	Restraint system	12

Downloaded from http://www.everyspec.com

			Page
Paragraph	5.2.3	Occupant strike envelope	12
	5.2.3.1	Head impact protection	12
	5.2.3.2	Lower extremity protection	13
	5.2.3.3	Upper extremity protection	13
	5.2.3.4	Control columns	13
	5.2.3.5	Visionics	13
	5.3	Cargo and equipment retention	14
	5.3.1	Cargo	14
	5.3.2	Ancillary equipment	14
	5.3.2.1	Strength of restraint devices	14
	5.3.2.2	Emergency and survival equipment storage location	14
	5.3.2.3	Release of retention devices for emergency and survival equipment	14
	5.4	Postcrash emergency escape provisions	15
	5.5	Postcrash fire prevention	15
	5.5.1	General	15
	5.5.1.1	Fuel containment	15
	5.5.1.2	Separation of fuel and ignition sources	18
	5.5.1.3	Separation of flammable fluids and occupiable areas	19
	5.5.1.4	Shielding	19
	5.5.1.5	Fuel drains	19
	5.5.1.6	Fill units and access covers	19
	5.5.1.7	Fuel pumps	20
	5.5.1.8	Fuel filters and strainers	20
	5.5.1.9	Fuel quantity indicators	20
	5.5.1.10	Vents	20
	5.5.2	Hydraulic and oil system	20
	5.5.2.1	Hydraulic and oil lines and couplings	21
	5.5.2.2	Hydraulic and oil system components	22
	5.5.2.3	Oil coolers	22
	5.5.3	Electrical systems	22
	5.5.3.1	Wiring	22
	5.5.3.2	Batteries and electrical components	23
	5.5.4	Airframe and interior materials	23
	6	NOTES	
	6.1	Changes from previous issues	23

FIGURES

Figure	1	Aircraft coordinates and attitude directions	27
	2	Roll and pitch attitude envelope	28
	3	Low angle impact design conditions	29

Downloaded from http://www.everyspec.com

PAGE

Figure 4 Rollover, side impact design condition---------- 30
5 Rollover, roof impact design condition---------- 31
6 Stress-strain properties for padding material for head contact---------- 32
7 Pedal geometry to prevent entrapment of feet---------- 33
8 Cargo lateral load-displacement requirements---------- 34
9 Forward load-displacement for energy-absorbing cargo restraint---------- 35
10 Frangible bolt attachment---------- 36
A-1 Static tests for self-sealing breakaway valves---------- 39

TABLES

Table Page

I Crash impact design conditions, with landing gear extended..... 6

II Minimum loads for standard hose and hose-end fittings 24

III Minimum loads for self-sealing hose and hose end fittings 25

IV Minimum loads for self-sealing hose with flanged hose-end fittings..... 26

APPENDIX

Appendix A Test Methods..... 37

Downloaded from http://www.everyspec.com

Downloaded from http://www.everyspec.com

1. SCOPE

1.1 Purpose. This document establishes minimum crash resistance criteria for implementation in the initial stages of aircraft system design.

1.2 Classification. The requirements of this specification pertain to the following aircraft types:

Type I - Light Fixed-Wing
Type II - Rotary-Wing, including Tilt Prop/Rotor Aircraft

2. REFERENCED DOCUMENTS

2.1 Government documents.

2.1.1 Specifications, standards, and handbooks. Unless otherwise specified, the following specifications, standards, and handbooks of the issue listed in that issue of the Department of Defense Index of Specifications and Standards (DoDISS) specified in the solicitation form a part of this standard to the extent specified herein.

SPECIFICATIONS

MILITARY

MIL-H-25579	Hose Assembly, Tetrafluorethylene, High Temperature, Medium Pressure, General Requirements for
MIL-T-27422	Tank, Fuel, Crash-Resistant, Aircraft
MIL-H-38360	Hose Assembly, Tetrafluroethylene High Temperature, High Pressure, Hydraulic and Pneumatic
MIL-S-58095	Seat System: Crash Resistant, Non-Ejection, Aircraft, General Specification for
MIL-H-83282	Hydraulic Fluid, Fire Resistant, Synthetic Hydrocarbon Base, Aircraft
MIL-H-83796	Hose Assembly, Rubber, Lightweight Medium Pressure, General Specification
MIL-S-85510	Seats, Helicopter Cabin, Crashworthy, General Specification for

2.1.2 Other Government documents, drawings, and publications. The following other Government documents, drawings, and publications form a part of this standard to the extent specified herein.

Federal Aviation Administration

FAR NO. 25.853 (b) NOPRM 13036	Flammability requirements

Downloaded from http://www.everyspec.com

(Copies of specifications, standards, handbooks, drawings, publications, and other Government documents required by contractors in connection with specific acquisition functions should be obtained from the contracting activity or as directed by the contracting activity.)

TECHNICAL REPORT

USARTL 79-22 A through -22E	Aircraft Crash Survival Design Guide

(Application for copies should be addressed to the US Army Aviation Applied Technology Directorate (AVSCOM), ATTN: SAVRT-TY-ASV, Ft Eustis, VA 23604-5577.)

2.2 Order of precedence. In the event of a conflict between the text of this standard and the references cited herein, the text of this standard shall take precedence.

3. DEFINITIONS

3.1 Abrupt accelerations. Accelerations of short duration, associated with crash impacts, ejection seat shocks, capsule impacts, etc.

3.2 Aircraft crashworthiness. The ability of an airframe structure to maintain a protective shell around occupants during a crash and minimize accelerations applied to the occupiable portion of the aircraft during crash impacts.

3.3 Ancillary equipment. Removable emergency survival, personal, or other equipment carried in the aircraft that could constitute a personnel survival hazard if unrestrained during a crash.

3.4 Collapse. Plastic deformation or fracture of structure to the point of loss of useful load-carrying ability or useful volume.

3.5 Deceleration. Acceleration in a direction to cause a decrease in velocity.

3.6 ΔV. The change in velocity of the airframe during the principal impact, expressed in feet per second.

3.7 Ditching. The controlled landing on water of an aircraft not designed for water landing.

3.8 Drip fence. A physical barrier which interrupts the flow of a liquid on the underside of a surface, such as a wing, and allows the liquid to drip from the surface.

3.9 Dynamic overshoot. The amplification of decelerative force on cargo or

Downloaded from http://www.everyspec.com

personnel exceeding the floor input decelerative force. This amplification is a result of the dynamic response of the system.

3.10 Environmental hazards. Occupant environmental hazards are classified as follows:

3.10.1 Primary members. Those rigid and semirigid structural members within the strike envelope of the occupant's head and chest.

3.10.2 Secondary members. Those rigid and semirigid structural members that could trap or injure the lower extremities to the extent that one's ability to rapidly escape would be compromised.

3.10.3 Tertiary members. Those rigid and semirigid structural members that could cause injury to flailing upper limbs to an extent that could reduce an occupant's ability to operate escape hatches or perform essential tasks.

3.11 Exit closure. A window, door, hatch, canopy, or other device used to close, fill, or occupy an exit opening.

3.12 Failure. Loss of functional capability.

3.13 Fire curtain. A baffle made of fire-resistant material that is used to prevent spilled flammable fluids and/or flames from reaching ignition sources or occupiable area.

3.14 Fire resistant. Material able to resist flame penetration for 5 minutes when subjected to 2000°F flame and still be able to meet its intended function(s).

3.15 Firewall. A partition capable of withstanding 2000°F flame for a period of 15 minutes without flame penetration.

3.16 Flammable fluids. Fluids that ignite readily in air, such as hydrocarbon fuels and lubricants.

3.17 Flow diverter. A physical barrier that interrupts or diverts the flow of a liquid.

3.18 Frangible attachment. An attachment possessing a part that is constructed to fail at a predetermined location and/or load.

3.19 G. The ratio of a particular acceleration (a) to the acceleration (g) due to gravitational attraction at sea level (32.2 ft/sec^2), G=a/g. With respect to the crash environment, unless otherwise specified, all values of G are those at a point approximately at the center of the floor of the fuselage. To illustrate, it is customarily understood that a value of G equal to 5 represents an acceleration of 5 x 32.2, or 161 ft/sec^2.

Downloaded from http://www.everyspec.com

3.20 $G_{avg} = \frac{(\text{Initial velocity})^2 - (\text{Final velocity})^2}{2 \times 32.2 \times S}$

where G_{avg} is the average acceleration causing the indicated velocity change over the distance S, and is expressed in multiples of gravitational acceleration (32.2 ft/sec^2).

3.21 Impact area. That part of an aircraft which encounters an object or terrain during a crash. In helicopters, rotor-blade impact on other portions of the aircraft must also be considered.

3.22 Incapacitated. Unable to extricate oneself from a crashed aircraft due to injury.

3.23 Load limiter. A device to limit the loads in a structure to a preselected value. These devices absorb energy by providing a resistive force applied over a deformation distance without significant elastic rebound.

3.24 Major impact. Impact which occurs when the majority of the decelerative forces are experienced and the most damage is sustained by the fuselage. The major impact might not be the initial impact.

3.25 Occupant acceleration environment. The direction, rate of onset, magnitude, and duration of impact acceleration sustained by an occupant. Human tolerance to impact accelerations is defined in USARTL TR 79-22B.

3.26 Postcrash hazard. The threat to occupant survival posed by fire, smoke, toxic gases, drowning, exposure, etc., following the impact sequence.

3.27 Rate of onset. The instantaneous rate of change of acceleration, i.e.,

$$\frac{d^3s}{dt^3}$$

where s and t denote distance and time. This parameter is more commonly calculated as average rate of change of acceleration over some finite length of time i.e., a/ t, where a denotes acceleration.

3.28 Retention strength. The strength of the linkages restraining occupants, cargo, or equipment.

3.29 Self-sealing breakaway valve. A fluid-carrying line or tank connection which will separate at a predetermined load and seal at both ends with a minimum loss of fluid.

3.30 Static strength. The maximum static load which can be sustained without structural failure, often expressed in terms of ultimate static load factors.

Downloaded from http://www.everyspec.com

3.31 Strike envelope. The area surrounding a restrained occupant which is within the flailing envelope of extended body parts.

3.32 Structural deformation. The bending, displacing, tearing and/or collapse of aircraft structure that occurs during a crash.

3.33 Structural integrity. The ability of a structure to sustain crash loads without collapse, failure, or deformation of sufficient magnitude to cause injury to personnel.

3.34 Survivable accident. An accident in which the forces transmitted to the occupant through the seat and restraint system do not exceed the limits of human tolerance to abrupt accelerations and in which the structure in the occupant's immediate environment remains substantially intact to the extent that a livable volume is provided for the occupants throughout the crash sequence.

4. GENERAL REQUIREMENTS

4.1 System crash resistance. Aircraft systems covered by this standard shall be designed to prevent occupant fatalities and to minimize the number and severity of injuries during crash impacts of the severity given in 4.2 while minimizing, to the maximum extent practical, aircraft damage. This shall be achieved by selecting the most effective mix of the crash resistance factors cited in 4.3 and by applying the requirements of Section 5. The designer must exercise judgement in choosing the extent of compliance with each factor based on consideration of component capabilities. For example, the individual energy attenuation provided by the landing gear, structure and seats may be adjusted to achieve the desired system crash response by using a system analysis approach.

4.2 Design impact conditions. Design impact velocity changes which represent compromise crashworthiness levels derived from consideration of crash statistics, human tolerance, and system cost, weight and performance are presented in Table I, are defined in more detail in 5.1.1 through 5.1.7.

4.3 General crash survivability design factors. Probability of occupant survival during crash impacts will be enhanced by inclusion of the following general crash survivability design factors during the initial design stages of the aircraft system:

a. Airframe protective shell
b. High mass component, equipment and cargo retention strength
c. Occupant acceleration environment
d. Occupant environment hazards
e. Postcrash hazards

USARTL TR 79-22A through E shall be used as a guide in the incorporation of these general crash survivability design factors.

Downloaded from http://www.everyspec.com

TABLE I. Crash impact design conditions, with landing gear extended.

Condition number	Impact direction (aircraft axes)	Object impact	Velocity Change ΔV (ft/sec)
1	Longitudinal (cockpit)	Rigid vertical barriers	20
2	Longitudinal (cabin)		40
3	Vertical*	Rigid horizontal surface	42
4	Lateral, Type I		25
5	Lateral, Type II		30
6	Combined high angle * Vertical	Rigid horizontal surface	42
	Longitudinal		27
7	Combined low angle Vertical	Plowed Soil	14
	Longitudinal		100

*For the case of retracted landing gear the seat and airframe combination shall have a vertical crash impact design velocity change capability of at least 26 ft/sec.

4.4 System testing. The component and subsystem tests described in Appendix A, 10.1 through 10.6 are mandatory. Instrumented full scale crash test(s) (see 10.7 of Appendix A) are desirable to substantiate the capability of the aircraft system to prevent fatalities and minimize injuries during crashes of the severity cited in 4.2 If system testing is not conducted, than analysis shall be required to show that the individual components and subsystems function together effectively to achieve the specific overall level of crashworthiness.

4.5 Aircraft coordinates. When referring to an aircraft in any flight attitude, it is standard practice to use a basic set of orthogonal axes as shown in Figure 1 with x, y, and z referring to the longitudinal, lateral, and vertical directions, respectively.

5. DETAIL REQUIREMENTS

5.1 Aircraft crash resistance. The aircraft structure shall provide a protective shell (see 3.2) for occupants in crash velocity changes of the severity cited in 4.2; moreover, the structure and equipment shall allow deformation in

Downloaded from http://www.everyspec.com

a controlled, predictable manner so that forces imposed upon the occupants will be tolerable while still maintaining the protective shell. Unless otherwise stated herein, the aircraft design gross weight (DGW) shall be used for the vehicle weight in the analyses required by this paragraph.

5.1.1 Longitudinal (ΔV_x) impact.

5.1.1.1 Impact conditions. The designer shall demonstrate analytically that the basic airframe is capable of impacting longitudinally into a rigid vertical barrier at a contact velocity of 20 ft/sec without crushing the pilot and copilot stations to an extent which would either preclude pilot and copilot evacuation of the aircraft or preclude a livable volume for the aircraft occupants. For this impact, the engine(s), transmission, and rotor system for Type II aircraft shall remain intact and in place in the aircraft. The basic airframe's capability to impact longitudinally into a rigid vertical barrier or wall at a contact velocity of 40 ft/sec without reducing the length of the passenger/troop compartment by more than 15% shall be demonstrated analytically. Any consequent inward buckling of walls, floor, and/or roof shall not be hazardous to the occupants and/or restrict their evacuation.

5.1.1.2 Earth scooping effects. To the extent practical design features for reducing the earth scooping effects encountered in longitudinal impacts shall include, but not be limited to, the following:

a. Provide a large, relatively flat surface in those areas which could otherwise gouge or plow, thereby increasing the aircraft's tendency to slide over the impacted terrain.

b. Minimize inward buckling of the fuselage nose or engine nacelle for the purpose of maintaining skid surface integrity.

c. Design the nose section to preclude any earth plowing and scooping tendency when the forward 25% of the fuselage has a uniformly applied local upward load of 10G and an aft load of 4G.

5.1.1.3 Buckling effects. To minimize hazards to occupants created by the buckling of the structure, the aircraft shall be designed to:

a. Provide sufficient structural strength to prevent bending or buckling failure of the fuselage sections which contain occupant compartments under the conditions cited in 5.1.1.1.

b. Position occupants away from likely fuselage fracture areas.

c. Minimize buckling inward into living space.

Downloaded from http://www.everyspec.com

5.1.1.4 Floor. The floor structure shall be of sufficient strength to carry, without failure, loads applied by occupant (5.2) and cargo restraint (5.3) systems in impacts of the severity cited in 4.2.

5.1.2 Vertical (ΔV_z) impacts.

5.1.2.1 Impact conditions. The designer shall analytically demonstrate the capability of the aircraft system, with rotor/wing lift equal to DGW and with landing gear extended, to withstand vertical impacts of 42 ft/sec on a rigid horizontal surface without (1) reducting the height of the cockpit and passenger/troop compartments by more than 15% or (2) allowing the occupants to experience injurious accelerative loading. For vertical impacts higher than 42 ft/sec, the crew and troop compartment roof structure should preclude catastrophic ceiling collapse and maintain a survivable volume for occupant. For the case of retracted landing gear the designer shall analytically demonstrate the capability of the aircraft to withstand impacts of at least 26 ft/sec on a rigid horizontal surface without (1) reduction in height of the cockpit and passenger/troop compartments of more than 15% or (2) causing the occupants to experience injurious accelerative loading. The above capabilities, with gear up or down, are required for all aircraft orientation (attitudes) upon impact in +15° to -5° pitch and ±10° roll as defined in Figure 2.

5.1.2.2 Design techniques. Design techniques for accomplishing the goal cited in 5.1.2.1 shall include, but not be limited to, the following:

a. Locate high mass components in a manner so that they will not intrude into occupied areas during the crash impact.

b. Provide sufficient cockpit and cabin vertical strength to prevent the structure from crushing occupants.

c. Provide crash-force attenuating structure beneath cockpit/cabin flooring and other locations as deemed appropriate.

d. Provide energy absorbing landing gear.

e. Provide energy absorbing crew/troop/passenger seats.

5.1.3 Lateral (ΔV_y) impacts. The designer shall analytically demonstrate the capability of the aircraft to withstand lateral impacts of 25 ft/sec for Type I and 30 ft/sec for Type II aircraft without reducing the width of occupied areas by more than 15%. Precaution shall be taken during design of the vehicle to minimize chances that the occupants, including their extremities, could become trapped between the structure and any impacting surfaces following failure of doors, canopies, or hatches.

5.1.4 Combined impacts. The designer shall analytically demonstrate the capability of the aircraft, with 1 DGW rotor/wing lift and with landing gear

Downloaded from http://www.everyspec.com

extended to withstand the following combined impacts without a reduction of the cockpit or cabin compartments that would seriously injure the occupants: (1) a combined impact on a rigid horizontal surface with vertical and longitudinal velocity changes of 42 and 27 ft/sec for the attitude envelope in Figure 2 respectively, and (2) a combined impact on plowed soil for the conditions described in Figure 3.

5.1.5 Rollover impacts.

a. The aircraft shall be designed to resist an earth impact loading as occurs when the aircraft strikes the ground and rolls to either a 90° (sideward) or 180° (inverted) attitude. If the forward fuselage roof or side can impact the ground, assume it is buried to a depth of 2.0 inches in soil and the load is uniformly distributed over the forward 25% of the occupiable fuselage length. The fuselage shall sustain a 4G (i.e. 4x aircraft DGW) load applied over the area(s) described for either the inverted or sideward attitudes shown in Figures 4 and 5 respectively, without permitting deformation sufficient to cause injury to seated, restrained occupants. For both cases, the 4G distributed load shall be analyzed for any angle of load application ranging from perpendicular to the fuselage skin (i.e., compressive loading) to parallel to the fuselage skin (i.e., shear loading). When designing for this condition, assume that emergency exit doors and windows cannot carry any loading.

b. Where the aircraft configuration precludes the occurrence of the above, an alternate design criterion shall be applied. The aircraft shall be assumed to be resting inverted on the ground in the most likely attitude which is critical for the safety of the occupants. Loads shall then be individually applied locally and consist of the following multiplication factors times the DGW

(1) 4 perpendicular to the ground.

(2) 4 along the longitudinal axis, parallel to the ground.

(3) 2 along the lateral axis, parallel to the ground.

5.1.6 Wings. For Type I aircraft, wing design shall possess frangible characteristics to cause wings to break free from the fuselage under high inertia loads caused by striking a barrier such as an earth mound. Type II aircraft wings used to support external stores prevent rollover of the helicopter in many accidents and should not be frangible, but should allow the stores to separate under high G loads while maintaining the structural integrity of the wing. However, the wing should break off before the fuselage structure itself collapses in order to maintain fuselage structural integrity.

5.1.7 Landing gear. Extended landing gear shall provide energy absorption to reduce the vertical velocity of the fuselage under the crash conditions defined in 4.2. As a minimum for Type II aircraft the landing gear shall be capable of decelerating the aircraft with 1 DGW rotor wing lift and from an impact velocity

Downloaded from http://www.everyspec.com

of 20 ft/sec onto a level, rigid surface without allowing the fuselage to contact the ground. Plastic deformation and damage of the landing gear is acceptable; however, the remainder of the aircraft structure except possibly rotor blades should be flightworthy after the impact. The aircraft shall be capable of meeting this criterion in accidents including a simultaneous fuselage angular alignment of ±10° roll and + 15° to -5° pitch as defined in Figure 2. The landing gear shall be designed so that gear failure does not increase danger to occupants, either by gear penetration of the occupiable areas or by rupturing flammable fluid containers or by damaging on-board stores such as missiles, rockets, and ammunition. It is desirable that the landing gear continue to absorb energy even after fuselage contact has been made, to maximize the protection afforded by the gear.

5.1.8 High mass retention.

5.1.8.1 Type I aircraft. Engine mounts shall be designed to keep the engine attached to the basic structure supporting the mount under the crash conditions cited in 4.2, even though considerable distortion of the engine mount and support structure occurs. The basic structure supporting the engine shall fail or separate before engine mount failure occurs. Engine mounts and supporting structures, including firewall bulkheads, shall be designed to minimize earth scooping (see 5.1.1.2).

5.1.8.2 Type II aircraft.

a. Mounting of engines, transmissions, fuel cells, rotor masts and other high mass items shall be designed to prevent their displacement in a manner that would be hazardous to occupants under the crash conditions cited in 4.2.

b. The transmission and rotor hub shall not displace in manner hazardous to the occupants during the following impact conditions:

(1) Rollover about the vehicle's roll or pitch axis.

(2) Main rotor blade obstacle strike that occurs within the outer 10% of blade span assuming the obstacle to be an 8 inch-diameter rigid cylinder.

c. All high mass items which could pose a hazard to personnel during a crash shall be designed to withstand the following ultimate load factors:

(1) Applied Separately

Longitudinal	±20
Vertical	+20/-10
Lateral	±18

(2) Applied Simultaneously

Downloaded from http://www.everyspec.com

	CONDITION		
	A	B	C
Longitudinal	±20	±10	±10
Vertical	+10/-5	+20/-10	+10/-5
Lateral	±9	±9	±18

5.2 Occupant retention. Occupants shall be retained in their seating and litter systems within the aircraft during crashes of the severity cited 4.2. Seating and litter systems design shall be coordinated and interfaced with the design of the other aircraft areas covered by this standard to achieve a completely integrated and efficient crash resistant aircraft system design. Seats and litters may be attached to the ceiling, as well as to the floor to help react forward and latteral loads. However, neither seats nor litters should be suspended from the overhead structure unless the ceiling is capable of sustaining, with minimum deformation, the downward inertial loads added by occupied seats or litters under the crash conditions. Aircraft structure shall provide the necessary strength to react the seat or litter loads resulting from the required crash impact conditions presented in Table I. Seat and litter design shall provide the greatest practical amount of support and contact area for the occupants in the directions of the most severe and likely impacts. Seats shall provide an integral means of crash force attenuation. Sufficient space should be provided around the seat so that elastic lateral or forward deflection does not produce seat contact with surrounding structure that could interfere with energy absorbing motion of the seat.

5.2.1 Seating systems.

5.2.1.1 Pilot and copilot. Pilot and copilot seats shall conform to MIL-S-58095. Any depressions or wells provided to permit the seat to stroke below floor level shall be covered by a frangible material which allows the seat to stroke through the cover with a resistance less than 150 pounds.

5.2.1.2 Cabin. Forward, side, and rear facing cabin seats shall conform to MIL-S-85510.

5.2.2 Litters. High strength litters capable of withstanding the loads cited in 5.2.2.3 shall be utilized. Alternately, conventional litters may be used, provided a structural pan is installed under each litter which can carry the loads directly.

5.2.2.1 Orientation. Litters shall be oriented within the aircraft to maximize the probability that the occupant will remain restrained in the litter during a survivable crash. Litter shall be oriented laterally in the aircraft whenever possbile.

5.2.2.2 Materials. Materials shall meet the same requirements cited for seating systems (5.2.1.1 and 5.2.1.2).

Downloaded from http://www.everyspec.com

5.2.2.3 Support structure. Installed litters shall be capable of withstanding, without failure, a static downward load of 25G, an upward load of 8G, a forward load of 20G, and a sideward load of 20G. There shall be a minimum clearance of 8 inches between the floor and the top of the horizontal support poles of the lowest litter. Litter loads shall be based on an occupant weight of 250 pounds.

5.2.2.4 Attachment to airframe. Litter-airframe structure connectors shall be strong enough to preclude failure under the conditions describe in paragraph 5.2.2.3. These attachments shall be configured so that crew members or passengers can easily determine when litters are locked in place.

5.2.2.5 Restraint system. Two wraparound straps shall be used with each litter and each strap shall be capable of withstanding a 4000-pound loop load (2000-pound in pure tensile loading). At the 2000 pound load in pure tension, strap elongation shall not be more than 4 inches for a minimum strap length of 48 inches. Straps shall be automatic self-adjusting for length and fitted with quick disconnects.

5.2.3 Occupant strike envelope. The occupant's immediate environment shall be designed so that when the body parts do flail and contact structure, injury is minimized. Head and body extremity strike envelopes are provided in the Crash Survival Design Guide.

5.2.3.1 Head impact protection. Head impact tolerance is defined in the Crash Survival Design Guide. The head strike envelope shall incorporate the following protective features:

a. Rigid and semirigid structural members shall be located outside the head strike envelope when feasible.

b. Suitable energy absorbing padding materials, frangible breakaway panels, smooth contoured surfaces, or ductile materials shall be used in those areas within the head strike envelope. These areas include: window and door frames, consoles, control columns, seat backs, electrical junction boxes, instrument panels, armor, etc.

c. Frangible items such as optical relay tubes shall break away at a total force not exceeding 300 pounds.

d. Energy-absorbing padding shall be used where frangible panels or ductile materials are not practical or feasible. Padding shall have the following characteristics:

(1) The stress-strain characteristics shall fall within the acceptable area illustrated in Figure 6.

(2) The acceleration of the head shall not exceed 150G and sufficient

Downloaded from http://www.everyspec.com

padding material must be crushed to reduce the head velocity from 25 to 0 ft/sec in the process of absorbing the head's kinetic energy of approximately 107 ft. lb. (i.e., an 11 lb head striking at 25 ft/sec).

(3) Padding shall not be broken away from corners or cut through by sharp edges during head impact.

(4) Edges and corners to be padded shall have a minimum radius of 0.5 inch.

e. Headborne weight for a helmet with helmet mounted display shall be limited to four pounds.

5.2.3.2 Lower extremity protection. Energy-absorbing padding, frangible panels, and ductile materials shall be used to reduce injuries to the occupant in the lower extremity strike envelope. The following lower extremity protective design features shall be provided:

a. Frangible panels shall be designed to break away at force levels of 800 pounds or less, wherever practical. Such panels should breakaway without sharp or jagged edges that would injure the occupants.

b. Energy-absorbing padding shall be applied over areas with a radius of 2 inches or less. The padding shall be a minimum of 0.75 inch thick.

c. Pedal devices which may actuate, through either force or displacement, various aircraft controls such as antitorque, rudder, and brakes shall provide support to both the heel and ball of the foot to prevent entrapment during the crash sequence. Geometry shall comply with Figure 7.

d. Structure surrounding foot-operated controls shall be of sufficient strength to keep from crushing or trapping the lower limbs in accidents of the severity described in paragraph 4.2.

5.2.3.3 Upper extremity protection. Protection for flailing arms shall be provided by adhering to the principles specified in subparagraphs a and b of paragraph 5.2.3.2 above.

5.2.3.4 Control columns. Control columns, including center and side mounted cyclic sticks, shall be designed to avoid impaling the crewman. Telescoping features, padding, and frangible joints may by employed to achieve this goal. Frangible fittings must produce a clean break, without jagged or torn edges. Center located control sticks shall separate flush with the floor. Any separating or telescoping mechanism must be proven to be incapable of catastrophic premature actuation leading to loss-of-control of the aircraft. Control columns which pass longitudinally through the instrument panel shall be avoided; however, if used, they shall be collapsible to avoid impaling crewman in a crash of the severity described in paragraph 4.2.

5.2.3.5 Visionics. Heads down displays projecting into the cockpit from the instrument panel shall be padded and designed to either collapse or breakaway

Downloaded from http://www.everyspec.com

at a force not to exceed 300 pounds. Implosion characteristics of cathode ray tube (CRT) displays shall not be hazardous to occupants during a crash.

5.3 Cargo and equipment retention.

5.3.1 Cargo. Cargo restraints shall not permit cargo to shift in flight during turbulent weather, and shall provide restraint of cargo in accordance with the criteria provided below to prevent injury to personnel. Cargo shall be restrained to longitudinal loads of 16G peak with a longitudinal velocity change of 43 ft/sec. Lateral and forward strength-deformation characteristics shall be in accordance with those indicated in Figures 8 and 9 respectively. If the structure of the fuselage and floor is not strong enough to withstand the cargo crash loads, load limiters shall be used to limit the loads transmitted to the structure. Nets used to restrain small bulk cargo shall be constructed of material with high stiffness characteristics in order to reduce dynamic overshoot to a minimum. Restraining lines without load limiters used for large cargo (3 foot cube or more) longitudinal restraint shall be so arranged that maximum load in all lines is reached, as close as possible, simultaneously. Restraining lines having different elongation characteristics shall not be used on the same piece of cargo. If load limiters are used, restraining lines shall be of a material with low-elongation characteristics to insure the most efficient energy absorption. Displacement measurements shall be made at the floor level, as illustrated in Figure 9.

5.3.2 Ancillary equipment. All ancillary equipment (see 3.3) carried aboard an aircraft shall be provided with integrated restraint devices or anchors to the aircraft structure. Restraint devices or anchors shall insure retention of the equipment during any survivable crash of the severity cited in paragraph 4.2. Stowage space for nonrestrained items shall be provided in all aircraft. This space shall be located so that the items stored in it cannot become hazards to occupants in a survivable crash.

5.3.2.1 Strength of restraint devices. Ancillary equipment shall be restrained to 50G downward, 10G upward, 35G forward 15G aftward, and 25G sideward.

5.3.2.2 Emergency and survival equipment stowage location. Equipment shall be (1) located close to the crew chief station, if applicable; (2) stowed in easy view of crew and passengers; and (3) easily and reliably accessible in an an emergency. Equipment shall not be placed in areas where cargo shifting or fuselage distortion will prevent or impair access to it. Equipment stowage location shall minimize the potential adverse effects of extreme temperatures, abrasion, and uncleanliness.

5.3.2.3 Release of retention devices for emergency and survival equipment. Retention devices used to restrain emergency and survival equipment shall be capable of quick release without the use of tools by one person using one hand. Release shall be effected by a single motion actuating one device. If equipment is stowed in an enclosure, no more than 5 seconds shall be required

Downloaded from http://www.everyspec.com

for opening the enclosure and removing the equipment. Aircraft attitude shall not affect operation of release devices.

5.4 Postcrash emergency escape provisions.

a. Exits of sufficient size and number shall be provided in the aircraft so that, if some of them are blocked due to the postcrash position of the aircraft on flat open terrain, the maximum number of personnel to be carried may be evacuated within 30 seconds. Fuselage or wing-mounted stores shall not restrict escape.

b. Exits shall be provided that will permit escape of all personnel and gathering of survival equipment in the time available before the aircraft sinks after ditching. Equipment mounted on the exterior of the aircraft shall be accessible from emergency exits used when the aircraft ditches. Release mechanisms shall not jam as a result of structural deformation due to ditching.

c. The following features shall be provided and shall comply with the design criteria contained in the Crash Survival Design Guide.

(1) Emergency exits
(2) Identification and marking of aircraft emergency exits
(3) Emergency lighting (as necessary on larger aircraft).

5.5 Postcrash fire protection.

5.5.1 General. The aircraft system shall be designed to possess the following postcrash fire protection characteristics.

5.5.1.1 Fuel containment. Fuel systems shall be designed to contain fuel during and after all crash impacts defined in 4.2. What spillage cannot be avoided, such as during the functioning of self-sealing breakaway coupling/valve, shall be minimized and precluded from ignition by controlling the ignition sources. Spillage of fuel through the vents during a rollover or at any adverse attitude condition shall be prevented.

5.5.1.1.1 Fuel tanks main.

a. Fuel tanks shall be located away from occupied areas away from ignition sources, and away from areas where structural deformation from the crash impact may cause crushing or penetration of the tank.

b. The fuel tank supporting structure shall maintain the tank in its proper position under all normal operating conditions and hard landings to prevent inadvertent breakaway coupling/valve actuation.

c. Where the fuel tanks are in a location potentially hazardous to the occupants, they shall be structurally retained to withstand the impact con-

Downloaded from http://www.everyspec.com

ditions of Table I based on a 75% fuel load.

d. Fuel tanks shall have smooth, regular shapes, with the sump area contoured gradually into the tank bottom. All concave corners shall have a minimum radius of 3 inches and all convex corners a minimum radius of 1 inch.

e. All fuel tanks shall be fabricated from crash-resistant material conforming to the requirements of MIL-T-27422.

f. All fuel tank fittings shall have a tank pullout strength which meets or exceeds that specified in MIL-T-27422.

5.5.1.1.2 Fuel tanks, extended range.

a. Internally mounted extended range tanks and plumbing shall be designed to the same criteria specified for the main tanks.

b. Externally mounted extended range tanks shall be jettisonable from the crew station. When utilized on Type II aircraft intended for nap of the earth missions, these tanks shall also be:

(1) Constructed of materials providing fuel containment capability equivalent to MIL-T-27422.

(2) Equipped with self-sealing, breakaway couplings/valves that will not snag.

(3) Connected with plumbing meeting the same criteria as the main tanks.

5.5.1.1.3 Fuel lines.

a. Fuel lines shall be located as far as possible from probable impact area and areas where structural deformation may cause crushing, penetration, or excessive tensile loading of the lines.

b. Fuel lines shall be constructed per MIL-H-83796 and routed so as to withstand all survivable crash impacts. This may be done by allowing the lines to elongate or shift with deforming aircraft structure rather than being forced to carry high tensile loads. Fuel lines shall be adequately supported by frangible clamps.

c. Fuel lines shall be routed along heavier structural members wherever possible in order to protect the fuel lines from impact damage. When fuel lines must be routed through areas of probable large displacement, self-sealing breakaway couplings/valves shall be incorporated into the lines to allow for complete separation with a minimum of fluid spillage.

d. All normally filled fluid-carrying fuel lines shall consist of flexible

Downloaded from http://www.everyspec.com

hose with a steel-braided outer sheath, where possible.

e. A single one piece hose shall be run through a bulkhead opening rather than attached to the bulkhead with rigid fitting, wherever possible. The diameter of the opening shall be 1 inch larger than the diameter of the hose with the hose stabilized by a frangible panel or structure. A grommet shall be installed in the opening to preclude wear on the hose. However, a self-sealing breakaway coupling/valve shall be used whenever a fuel line goes through a firewall so that the line will seal if the engine is displaced during crash impact. NOTE: Breakaway couplings/valves will not be required if the engine is tied down to a strength level of $20G_z$, $20G_x$, and $18G_y$ and the engine is so located that it is not likely to be crushed in any survivable accident.

f. Hoses shall not pull out of their end fittings, nor shall the end fittings break at less than minimum loads shown in Tables II, III, and IV.

g. Fuel lines shall exit fuel tanks in the least vulnerable areas from the standpoint of anticipated crash loads and structural deformation.

h. The number of fuel lines in the engine compartment shall be minimized.

5.5.1.1.4 Frangible attachments.

a. Frangible structures or fasteners such as those shown in Figure 10 shall be used at all attachment points between fuel tanks and aircraft structure to prevent fuel tank components from being torn out of the tank wall during impact. Frangible attachments shall be used at other points in the flammable fluid systems where aircraft structural deformation could lead to flammable fluid leakage.

b. The load required to separate a frangible attachment from its support structure shall be between 25 and 50% of the minimum load required to fail the weakest component in the attached system. (The failure load of the attached system components may be determined either by analytical or testing methods based upon the failure modes most likely to occur during crash impact.) To prevent inadvertent separation, the load shall be greater than five time normal operational and service loads at the frangible attachment location. The load shall not be less than 300 pounds. Refer to the Crash Survival Design Guide for an example of frangible attachment load calculations.

c. A frangible attachment shall separate whenever the required load (as defined in paragraph b. above) is applied in the modes most likely to occur during crash impact. These modes, whether tension, shear, compression, or combinations thereof, such as bending (tension-shear) must be determined for each attachment by analyzing the surrounding aircraft structure and probable impact forces and directions.

5.5.1.1.5 Self-sealing breakaway couplings/valves.

Downloaded from http://www.everyspec.com

a. Self-sealing breakaway couplings/valves shall be installed at all fuel tank-to-fuel line connections, tank-to-tank interconnects, and at other points in the fuel system where aircraft structural deformation could lead to system failure.

b. The load required to separate a breakaway coupling/valve shall be between 25 and 50% of the minimum failure load for the weakest component in the fluid-carry line. To prevent inadvertent actuation during flight and maintenance operations, the separation load shall be greater than five times normal operational and service loads at the coupling location. To avoid complete or partial breakaway coupling/valve separation during maintenance operations, the separation load must never be less than 300 pounds, regardless of the fluid line size. For examples of load calculation, refer to the Crash Survival Design Guide.

c. A breakaway coupling/valve shall separate whenever the required load (as defined in 5.5.1.1.5(b)) is applied in the modes most likely to occur during crash impact. These modes, whether tension, shear, compression, or combinations thereof, must be determined for each coupling by analyzing the surrounding aircraft structure and probable impact forces and directions.

d. All breakaway couplings/valves shall incorporate positive provisions for ascertaining that the coupling is locked open during normal installation and service. An inspector shall be able to visually confirm that the coupling is locked. In addition, all breakaway couplings/valves shall incorporate provisions in their design to prevent uncoupling due to operational shocks, vibrations, accelerations, etc.

e. All fuel line-to-fuel-tank connections shall consist of self-sealing breakaway couplings/valves. These couplings/valves shall be recessed into the tank so that the tank half does not protrude outside the tank wall more than 0.5 inch after valve separation. The shape of the tank coupling half shall be basically smooth to avoid snagging on adjacent structures or cutting the tank wall.

5.5.1.2 Separation of fuel and ignition sources. Fuel shall be located as far as possible from all potential ignition sources. Some general rules are:

a. Fuel shall not be located where it can readily mist,spray or spill onto hot surfaces or into engine induction or exhaust areas during crash impact.

b. Tank fillers shall not be located adjacent to engine intakes or exhausts so that the spillage could be ingested and/or ignited.

c. Electrical components and wiring shall be kept to a minimum in fuel tank areas.

Downloaded from http://www.everyspec.com

5.5.1.3 Separation of flammable fluids and occupiable areas.

a. Fuel tanks shall be isolated from the occupants by a minimum of one spillage barrier. A barrier may consist of continuous aircraft structure between the fuel cell and the occupants.

b. Fuel lines shall not be located in any occupiable compartment except for temporary lines for internally mounted extended range tanks.

5.5.1.4 Shielding.

a. Barriers shall be used wherever necessary to prevent spilled flammable fluids from reaching potential ignition sources or occupiable areas.

b. Drainage holes shall be located in all flammable fluid tank compartments and engine nacelles to prevent the accumulation of spilled flammable fluids within the aircraft.

c. Drip fences and/or drainage troughs shall be used to prevent the gravity flow of spilled fuels from reaching ignition sources such as hot engine area or electrical compartments while the aircraft is in cruise attitude.

5.5.1.5 Fuel drains.

a. The sump drain valves shall be recessed into the tank or suitably protected to prevent actuating during a crash. The actuating mechanism shall be suitably protected or have a breakaway feature to prevent valve opening during a crash.

b. All attachments of sump drains to aircraft structure shall be made with frangible fasteners.

c. Sump drain valves shall be designed to be positive locking in the closed position.

d. Sump drain valves shall be located so that discharged fuel will not cause an added fire hazard.

5.5.1.6 Fill units and access covers.

a. Filler caps shall be recessed into the tank wall to minimize their vulnerability to crash abrasion and shall be designed to insure that the cap stays with the tank if the tank moves relative to the aircraft structure. The filler caps shall have a minimum rating of 75 psi.

b. Long filler necks shall be avoided. If they must be used, they shall be fabricated from flexible materials and designed so that the neck and the filler cap stays with the tank and does not snag on the aircraft structure during impact displacement.

Downloaded from http://www.everyspec.com

c. Access covers shall be capable of carrying loads equal to or greater than those which the tank can withstand.

5.5.1.7 Fuel pumps.

a. A suction fuel feed system consisting of an engine mounted pump shall be utilized. Whenever a supplementary boost pump is necessary, it shall be an air-driven, internal tank mounted, or in-line pump. A less desirable selection is an in-line electric pump and the least desirable is a tank mounted electric pump.

b. Boost pumps mounted within the fuel tanks shall be fastened to the fuel tank only. If the pump must be supported or attached to the aircraft structure, a frangible attachment shall be used.

c. A manually operated on-off switch shall be provided in the cockpit for a boost pump which is not required to operate continuously.

5.5.1.8 Fuel filters and strainers.

a. Filters and strainers shall have a structural attachment capable of withstanding a 30G load applied in any direction.

b. Self-sealing breakaway couplings/valves shall be used to attach fuel lines to fuel filters and strainers to those locations where structural displacement is likely to cause a separation of these components.

5.5.1.9 Fuel quantity indicators. If a capacitance probe is used, it shall be fabricated from material possessing as low a flexural rigidity as is consistent with operational requirements and be frangibly mounted. A rounded shoe shall be incorporated at the probe bottom end to avoid any tank cutting tendency. The probes shall be either curved or angle mounted to reduce the danger of puncturing the tank during crash impact.

5.5.1.10 Vents. Each fuel tank shall incorporate anti-spillage routing of lines or vent valves. These vents shall be designed and tested to demonstrate that:

a. Adequate venting is provided during all normal flight and environmental conditions, including icing.

b. Fuel spillage is prevented for all aircraft postcrash attitudes.

c. Vent and valve sizing shall preclude fuel tank overpressurization in the event of refuel/defuel valve failure during closed circuit or single point pressure refueling.

5.5.2 Hydraulic and oil systems.

Downloaded from http://www.everyspec.com

a. Fire resistant hydraulic fluid per MIL-H-83282 shall be utilized as the primary fluid.

b. Hydraulic reservoirs and oil tanks shall not be located where spilled or sprayed fluid could readily be ingested into the engine or ignited by the engine exhaust.

c. Hydraulic accumulators shall be located such that their rupture shall not be hazardous to occupants or fuel containment.

d. Oil tanks shall be constructed from a crash-resistant material which meets or exceeds the strength and tear resistance required for fuel tank material in MIL-T-27422. The only exception shall be integrally mounted tanks or engines and transmissions.

5.5.2.1 Hydraulic and oil lines and couplings.

a. Oil and hydraulic lines consisting of flexible hoses with steel braided outer sheaths are preferred. Oil system hoses shall conform to the requirements of MIL-H-83796.

b. All hose assemblies shall meet or exceed the cut resistance, tensile strength, and hose-fitting pullout strength of those assemblies that are qualified to MIL-H-25579 and MIL-H-38360.

c. Hose shall not pull out of their end fittings nor shall the end fittings break at less than the minimum loads shown in Tables II, III, and IV when the assemblies are tested as described in paragraph 10.1.4.2.

d. The number of line couplings/valves shall be kept to a minimum. Whenever possible, a single one piece hose should be routed through a bulkhead opening rather than attached to the bulkhead with a rigid connection. The diameter of the opening should be 1 inch larger than that of the hose, with the hose stabilized by a frangible panel or structure. The opening shall contain a grommet to prevent chafing of the hose. However, self-sealing breakaway couplings/valves shall be used whenever a line goes through a firewall so that the line will seal if the engine is displaced during crash impact.

e. Self-sealing breakaway couplings/valves shall be used to connect lines to engines, oil tanks, hydraulic reservoirs, and system components, if enough structural deformation is probable to cause line elongation to the breaking point.

f. When hydraulic or oil lines must be stabilized, they shall be attached to the aircraft structure with frangible fasteners.

g. Hydraulic or oil lines shall not be routed in electrical or occupiable area, unless they are shrouded to prevent spillage. Hydraulic or oil lines

Downloaded from http://www.everyspec.com

should not be routed where they would be vulnerable in a crash.

h. The number of hydraulic and oil lines in the engine compartment shall be kept to a minimum. The lines should enter the engine compartment in a protected location.

5.5.2.2 Hydraulic and oil system components.

a. System components (e.g., pumps, valves, filters, actuators) shall not be located in electrical compartments or occupiable areas. Components should not be located near the bottom of the fuselage or in the leading edges of wings.

b. Components located in the engine compartment shall be restricted to those that are absolutely necessary for engine operation. For example, oil filters shall not be located here unless they are an integral part of the engine.

c. The construction and mounting of all system components shall be able to withstand 20G forces applied in any direction.

5.5.2.3 Oil coolers.

a. Oil cooler(s) shall not be located in the engine compartment. It is also desirable that coolers not be located in any areas where oil could be spilled or sprayed onto hot surfaces or ingested into the engine.

b. The oil cooler shall be located as far from anticipated impact areas as possible.

c. The oil cooler mounting(s) shall be able to withstand 20G forces applied in any direction.

5.5.3 Electrical systems.

5.5.3.1 Wiring.

a. Electrical wires shall be routed along heavier structural members of the airframe wherever possible.

b. Wire bundles shall be supported at frequent intervals along their length by frangible attachments where appropriate to the aircraft structure.

c. Wires should be routed above or away from flammable fluid lines and they should never be closely spaced between outer skin and fuel lines.

d. Wires shall not be routed near flammable fluid tanks unless the wires are shrouded to prevent arcing.

Downloaded from http://www.everyspec.com

e. Electrical wires shall exit components on their least vulnerable side. There shall be extra wire to accommodate structural deformation.

5.5.3.2 Batteries and Electrical Components.

a. Batteries, generators and other electrical components shall be located away from flammable fluid sources.

b. Batteries, generators, and other electrical components shall be mounted to the aircraft with structural attachments capable of withstanding 20G loads in any direction.

5.5.4 Airframe and Interior Materials. Airframe and interior materials in all aircraft must meet, as a minimum, the flammability requirement of FAR 25.853 in both the normally installed and crash damage state.

6. NOTES

6.1 Changes From Previous Issue. Asterisks or vertical lines are not used in this revision to identify changes with respect to the previous issue due to the extensiveness of the changes.

6.2 Subject Term (Key Word) Listing.

a. Crash resistance, aircraft, design for

b. Crash resistance, fixed wing, light aircraft

c. Crash resistance, rotary-wing aircraft

Custodian
Army - AV

Preparing Activity
Army - AV

Project No.
15GP-A085

Downloaded from http://www.everyspec.com

TABLE II. Minimim loads for standard hose and hose-end fittings.

Hose end fitting type	Fitting size*	Minimum tensile load (lbs)	Minimum bending load (lbs)
Straight			
Tension 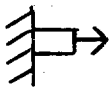	-4	575	450
	-6	600	450
	-8	900	700
	-10	1250	950
	-12	1900	1050
Bending 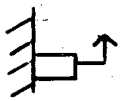	-16	1950	1450
	-20	2300	1600
	-24	2350	2750
	-32	3500	4000
90° Elbow			
Tension	-4**	575	800
	-6**	600	850
	-8**	900	1250
	-10	1250	575
	-12	1900	675
Bending	-16	1950	1200
	-20	2300	1250
	-24	2350	2025
	-32	3500	3500
45° Elbow			
Tension 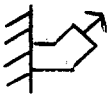	-4**	575	
	-6**	600	425
	-8**	900	425
	-10	1250	425
	-12	1900	600
Bending	-16	1950	1000
	-20	2300	1600
	-24	2350	2400
	-32	3500	3700

*Fitting size given in 1/16 in. units, i.e., -4 = 4/16 or 1/4 in.
**Elbow material is steel

Downloaded from http://www.everyspec.com

TABLE III. Minimim loads for self-sealing hose and hose-end fittings.

Hose end fitting type	Fitting size*	Minimum tensile load (lbs)	Minimum bending load (lbs)
Straight Tension 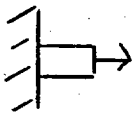	-10	2000	-
	-12	2130	1050
	-16	2850	1650
Bending 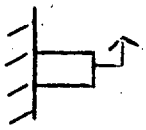	-20	2650	1700
	-24	3850	2500
	-32	2700	-
90° Elbow Tension 	-10	1950	700
	-12	3400	3700
	-16	3100	4300
Bending 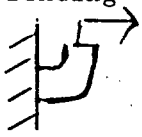	-20	2500	2500
	-24	3800	2500
45° Elbow Tension 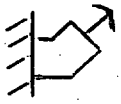	-10	1200	450
	-12	3000	800
	-16	3200	1800
Bending 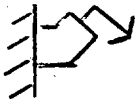	-20	2900	1700
	-24	3850	2500

*Fitting size given in 1/16 in. units i.e., -10 = 10/16 or 5/8 in.

Downloaded from http://www.everyspec.com

TABLE IV. Minimim loads for self-sealing hose with flanged hose-end fittings.

Hose end fitting type	Fitting size*	Minimum tensile load (lbs)	Minimum bending load (lbs)
Straight Tension	-12	2700	3600
Bending 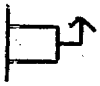	-16	2500	1650
	-24	2800	2500
90° Elbow Tension	-12	2400	2950
Bending 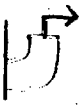	-16	2700	1050
	-24	3900	2500
45° Elbow Tension	-12	3100	1000
Bending 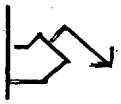	-16	2100	1350
	-24	3450	2500

*Fitting size given in 1/16 in. units, i.e., -12 = 12/16 or 3/4 in.

Downloaded from http://www.everyspec.com

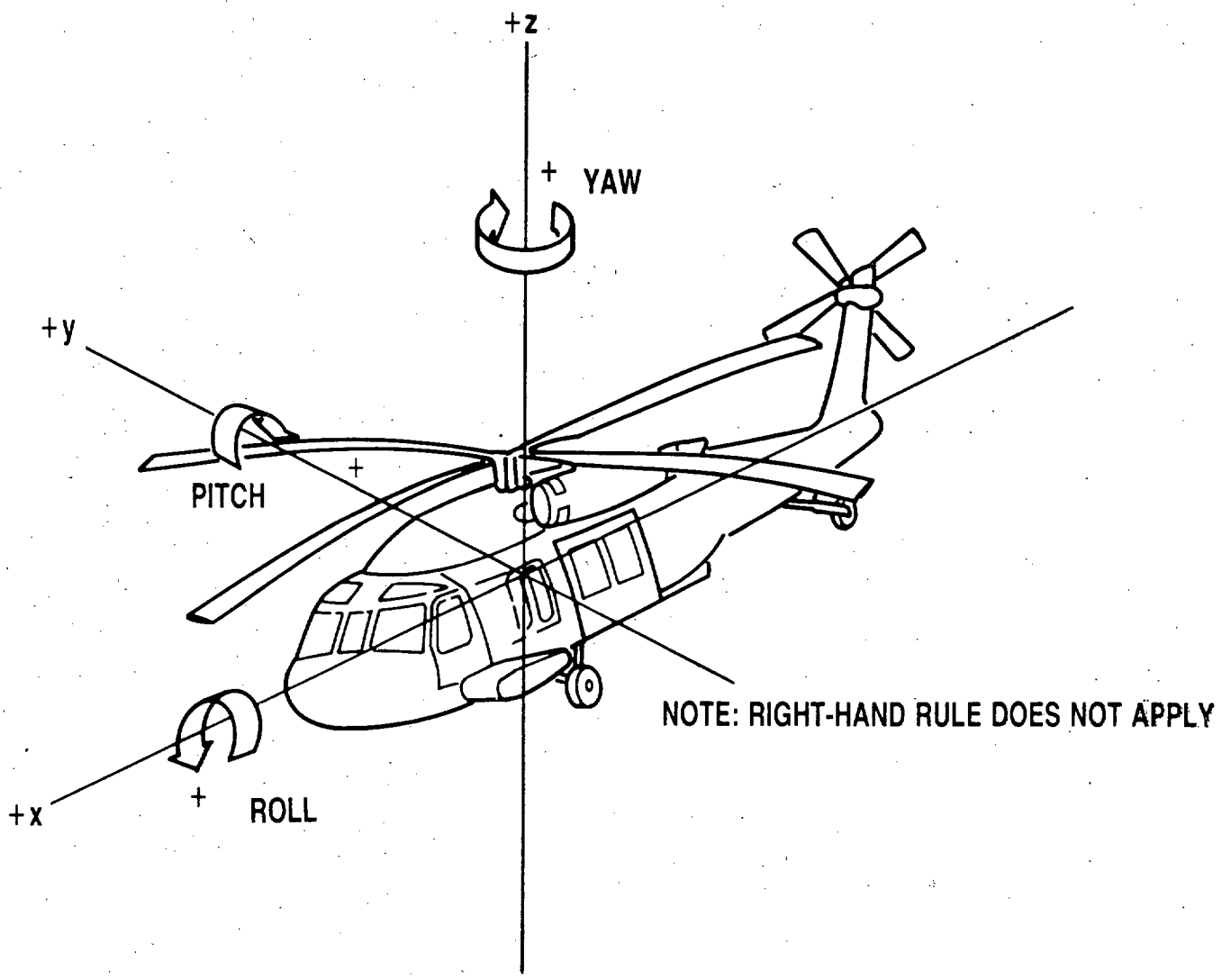

FIGURE 1. Aircraft coordinates and attitudes directions.

Downloaded from http://www.everyspec.com

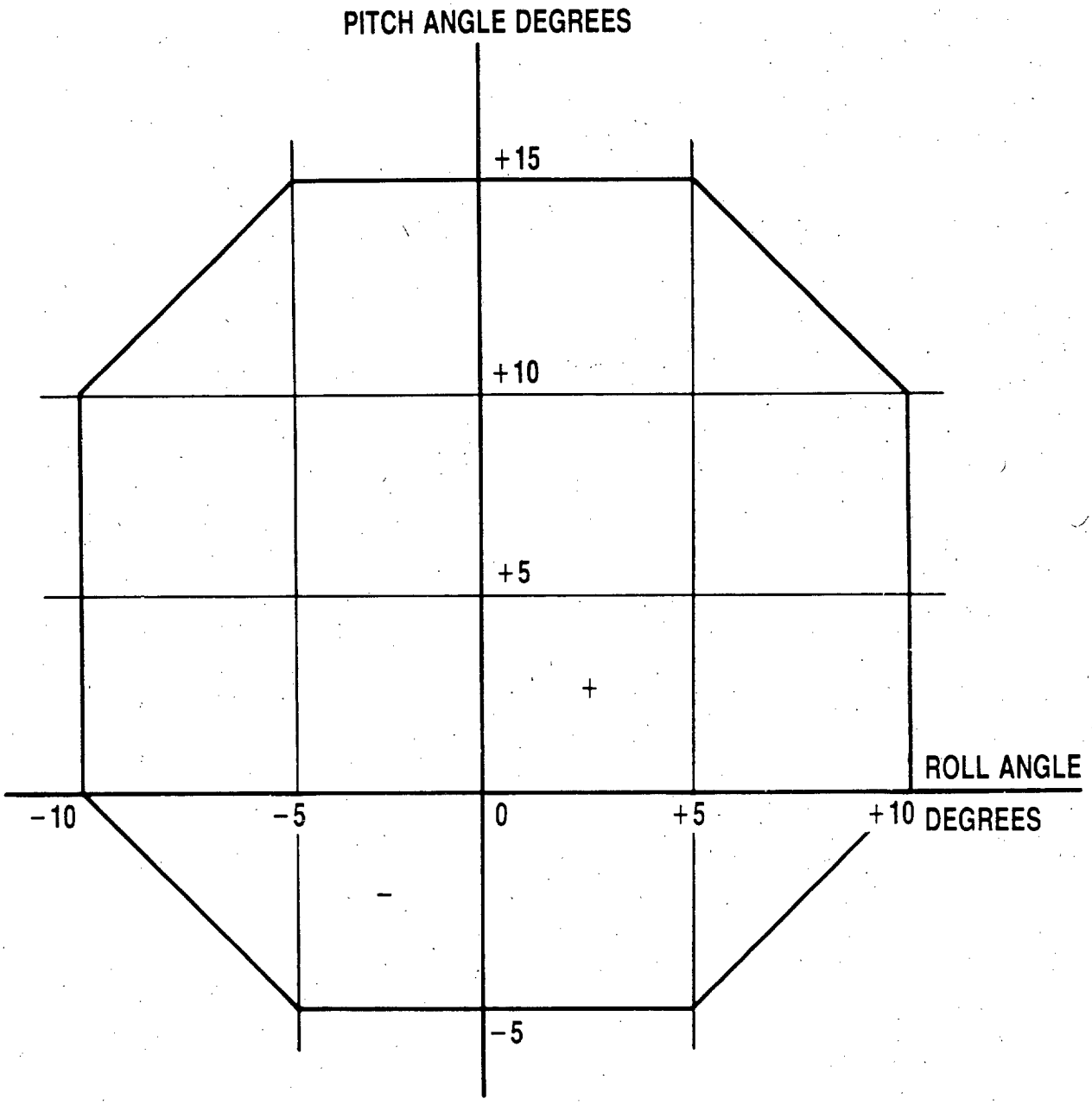

FIGURE 2. Roll and pitch attitudes envelope.

Downloaded from http://www.everyspec.com

IMPACT CONDITIONS:

1. SOIL OF CALIFORNIA BEARING RATIO = 2.5
2. AIRCRAFT PITCH (β) = 5 DEGREES NOSE DOWN
3. AIRCRAFT ROLL (δ) = $\pm$10 DEGREES
4. AIRCRAFT YAW (γ) = $\pm$20 DEGREES
5. FLIGHT PATH ANGLE (α) = $-$8 DEGREES DOWN
6. IMPACT GROUND SPEED OF 100 FEET PER SECOND
7. IMPACT SINK SPEED OF 14 FEET PER SECOND

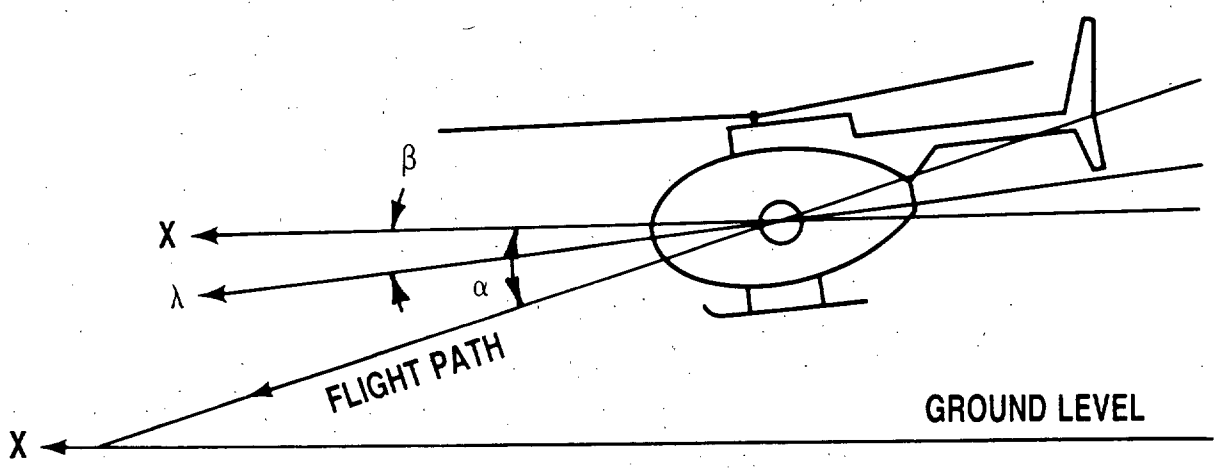

FIGURE 3. Low angle impact design conditions.

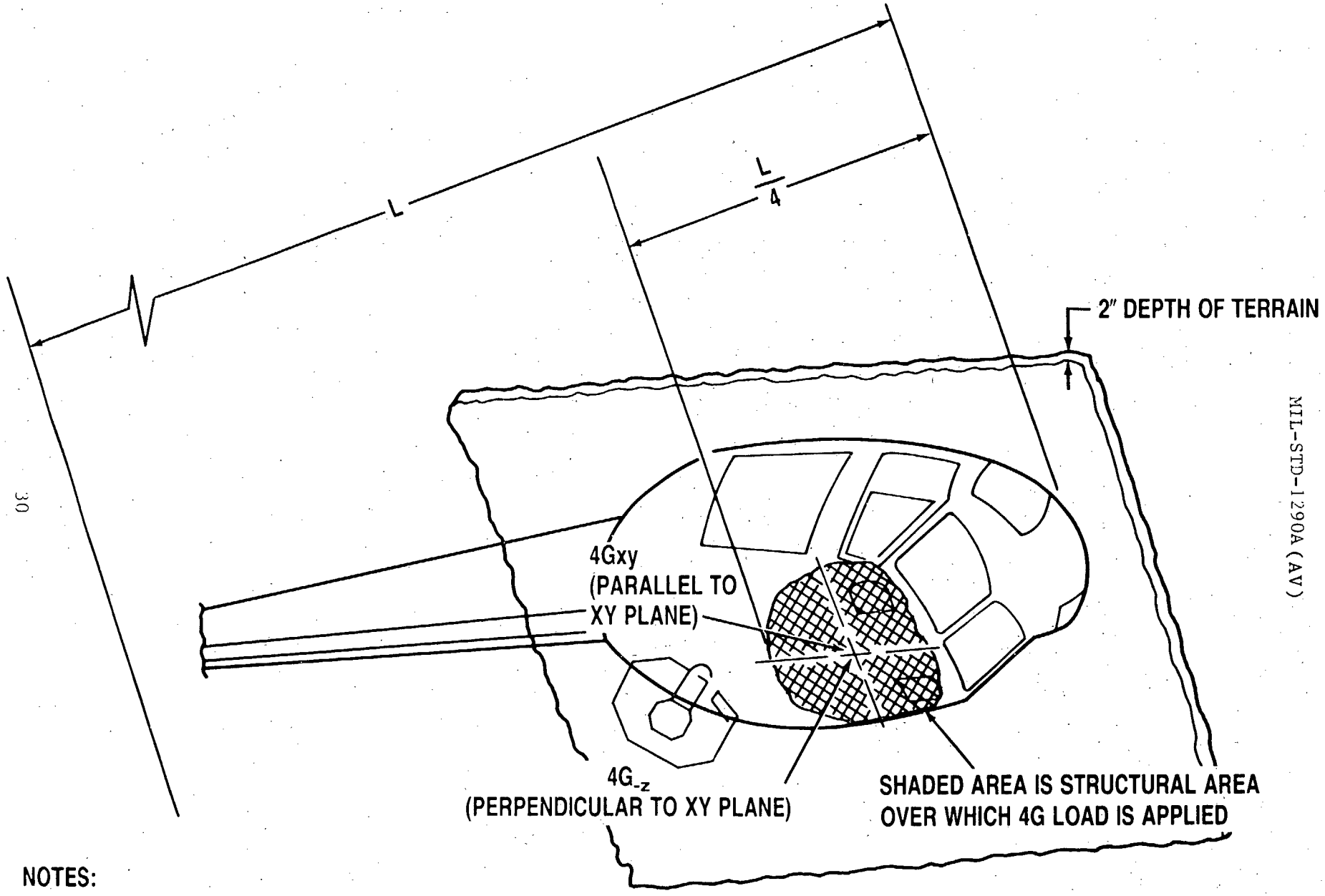

NOTES:

1. PRESSURE ON ROOF TO BE APPLIED UNIFORMLY OVER AREA RESULTING FROM IMMERSION IN SOIL TO A 2" DEPTH
2. L IS THE TOTAL LENGTH OF FUSELAGE WITHOUT EITHER MAIN OR TAIL ROTOR BLADES

FIGURE 4. Roll-over, roof impact design conditions.

Downloaded from http://www.everyspec.com

Downloaded from http://www.everyspec.com

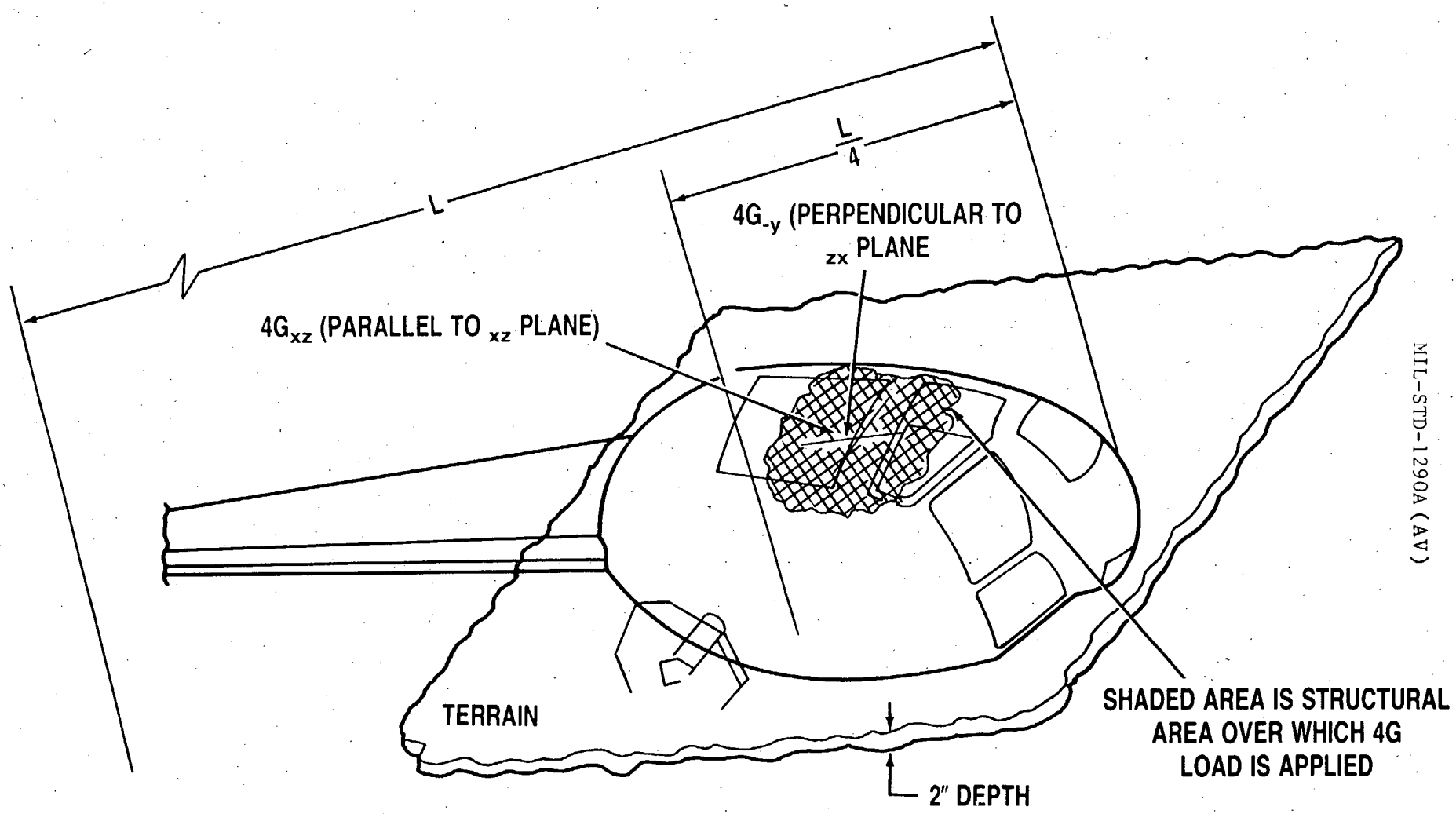

NOTES:

1. PRESSURE ON SIDES TO BE APPLIED UNIFORMLY OVER AREA FROM IMMERSION IN SOIL TO A 2" DEPTH.
2. L IS THE TOTAL LENGTH OF FUSELAGE WITHOUT EITHER MAIN OR TAIL ROTOR BLADES.

FIGURE 5. Roll-over, side impact design conditions.

Downloaded from http://www.everyspec.com

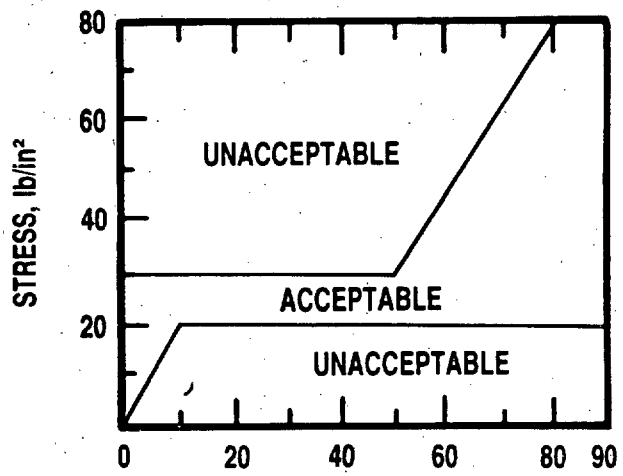

(A) GREATER THEN ONE INCH

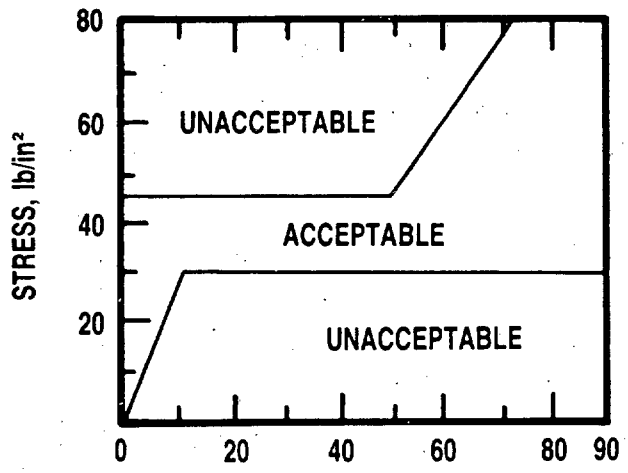

(B) LESS THAN ONE INCH

FIGURE 6. Stress-strain properties for padding material for head contact.

Downloaded from http://www.everyspec.com

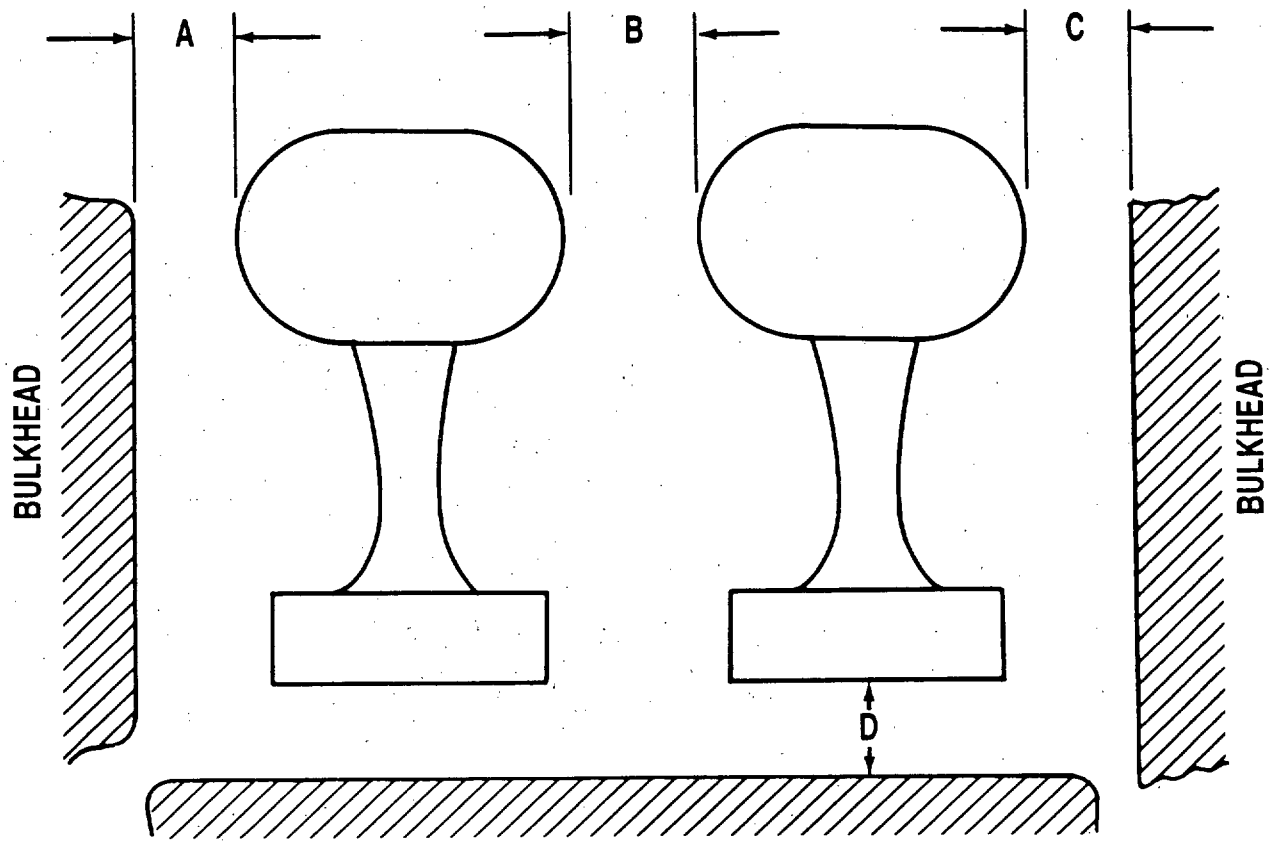

DIMENSIONS A, B, AND C, MUST BE EITHER LESS THAN 2″ OR MORE THAN 5″
DEMENSIONS D SHALL NOT EXCEED 3″

FIGURE 7. Pedal geometry to prevent entrapment of feet.

Downloaded from http://www.everyspec.com

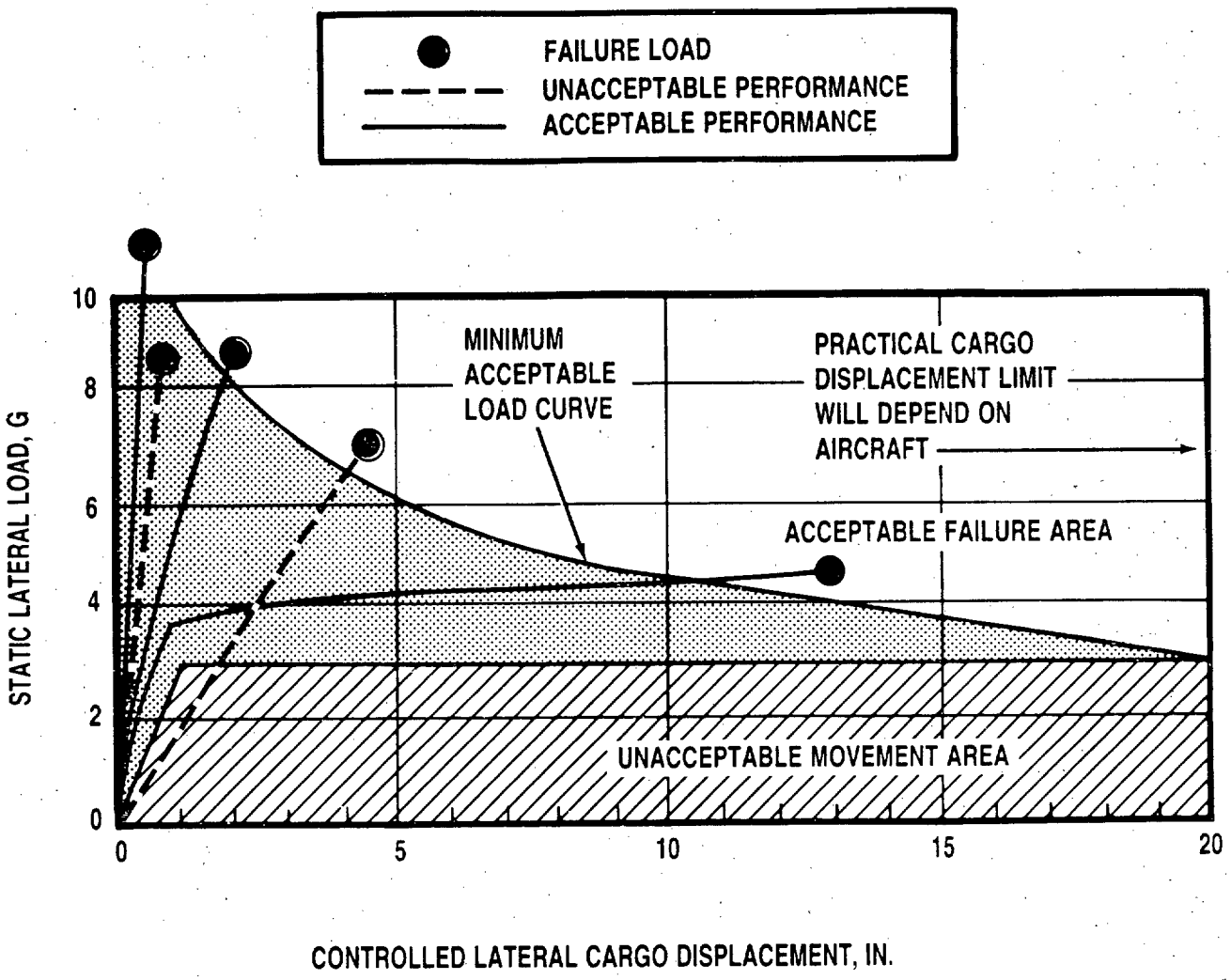

FIGURE 8. Cargo lateral load-displacement requirements.

Downloaded from http://www.everyspec.com

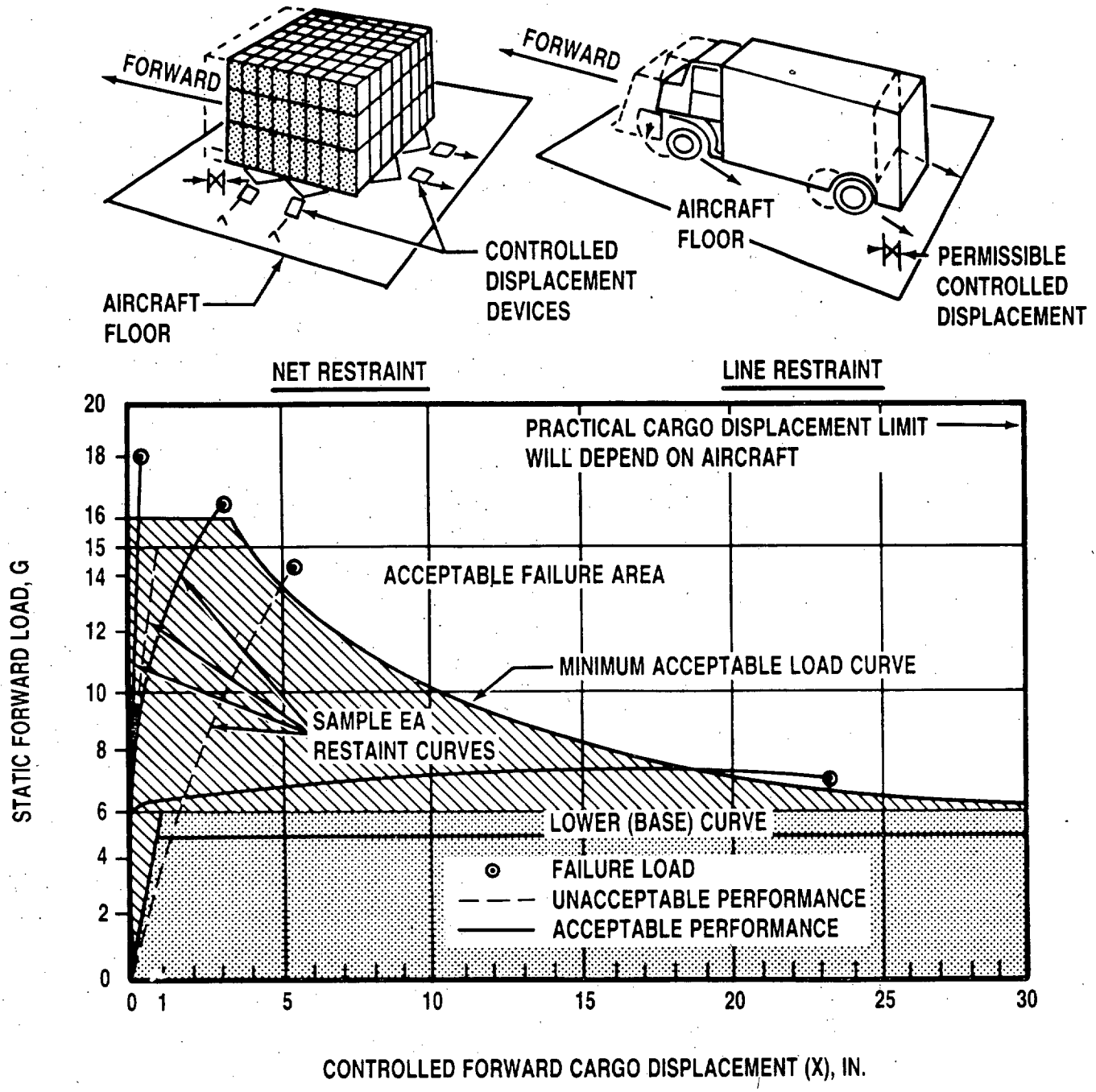

FIGURE 9. Forward load - displacement for energy-absorbing cargo restraint.

Downloaded from http://www.everyspec.com

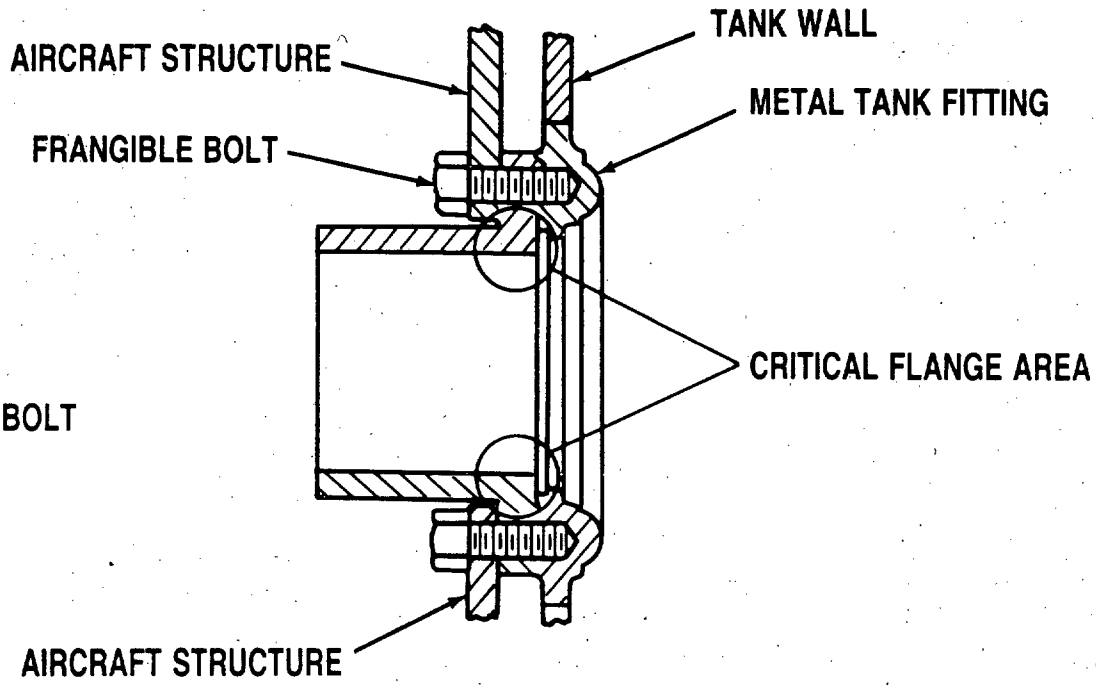

FIGURE 10. Typical frangible attachment.

Downloaded from http://www.everyspec.com

APPENDIX A

TEST METHODS

10. TESTS

10.1 Fuel systems

10.1.1 Fuel tank crashworthiness. Fuel tanks utilized shall be tested and qualified in accordance with MIL-T-27422.

10.1.2 Frangible attachments

10.1.2.1 Static tests. All frangible devices shall be tested in the three most likely anticipated modes of separation, as defined in paragraph 5.5.1.1.4. Test loads shall be applied at a constant rate not exceeding 20 inches per minute until failure occurs.

10.1.2.2 Dynamic tests. All frangible attachments shall be proof tested under dynamic loading conditions. The attachments shall be tested in the three most likely anticipated modes of operation, as defined in paragraph 5.5.1.1.4. The test load shall be applied in less than 0.005 second, and the velocity change experienced by the loading jig shall be 36 ± 3 feet per second.

10.1.3. Self-sealing breakaway valves

10.1.3.1 Static tests. The breakaway valve shall be subjected to tension and shear loads to establish the load required for separation, nature of separation, and leakage during valve actuation (see Figure A-1). The rate of load application shall not be greater than 20 inches per minute. Tests to be used where applicable are shown in Figure A-1.

10.1.3.2 Dynamic tests. All breakaway valves shall be proof tested under dynamic loading conditions. The valves shall be tested in the three most likely anticipated modes of separation as defined in paragraph 5.5.1.1.5. The test configurations shall be similar to those shown in Figure A-1. The load shall be applied in less than 0.005 second, and the velocity change experienced by the loading jig shall be 36 ± 3 feet per second.

10.1.4 Hose assemblies

10.1.4.1 Fuel and oil system assemblies

a. All hose assemblies shall be tested as specified in MIL-H-83796.

b. Hose assemblies shall be tested to show compliance with the strength requirements of Tables II, III and IV. Loads shall be applied at a constant

Downloaded from http://www.everyspec.com

rate not exceeding 20 inches per minute.

10.1.4.2 Hydraulic system assemblies.

a. All hose assemblies shall be tested as specified in MIL-H-25579 and MIL-H-38360.

b. Hose assemblies shall be tested to show compliance with the strength requirements of Tables II, III and IV. Loads shall be applied at a constant rate not exceeding 20 inches per minute.

10.2 Crew seat. All pilot and copilot seats shall be tested and qualified in accordance with MIL-S-58095.

10.3 Troop and passenger seats. All troop and passenger seats shall be tested and qualified in accordance with MIL-S-85510.

10.4 Litters. Litter supports and installations shall be statically tested to show compliance with 5.2.2.3.

10.5 Landing gear crash testing. Instrumented drop tests shall be conducted to: (1) verify landing gear crash force attenuation and crash loading strength characteristics analytically predicted and (2) substantiate the capability of the aircraft landing gear to meet the criteria of paragraph 5.1.7 of this standard.

10.6 Flammability tests. Selected airframe and interior materials shall be tested per FAR 25.853 in both the operational and crash damage states.

10.7 Aircraft system testing. Instrumented, full-scale aircraft crash test(s) should be conducted to: (1) verify analyses performed and (2) substantiate the capability of the aircraft system to prevent occupant fatalities and minimize injuries during crashes of the severity cited in 4.2. The number, scope, and nature of the tests shall be specified by the procuring activity.

Downloaded from http://www.everyspec.com

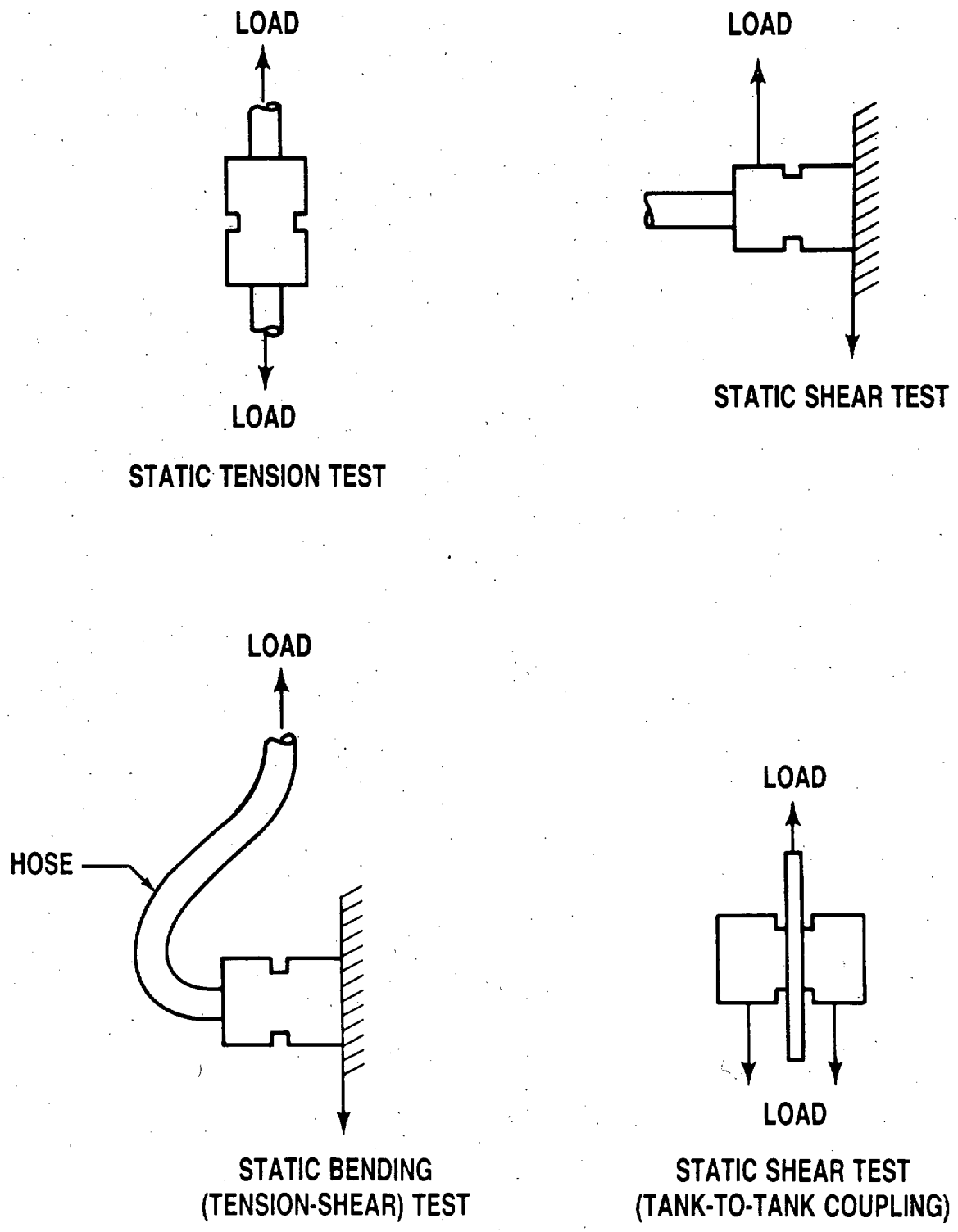

FIGURE A-1. Static test for self-sealing breakaway valves.

Downloaded from http://www.everyspec.com

INSTRUCTIONS: In a continuing effort to make our standardization documents better, the DoD provides this form for use in submitting comments and suggestions for improvements. All users of military standardization documents are invited to provide suggestions. This form may be detached, folded along the lines indicated, taped along the loose edge *(DO NOT STAPLE)*, and mailed. In block 5, be as specific as possible about particular problem areas such as wording which required interpretation, was too rigid, restrictive, loose, ambiguous, or was incompatible, and give proposed wording changes which would alleviate the problems. Enter in block 6 any remarks not related to a specific paragraph of the document. If block 7 is filled out, an acknowledgement will be mailed to you within 30 days to let you know that your comments were received and are being considered.

NOTE: This form may not be used to request copies of documents, nor to request waivers, deviations, or clarification of specification requirements on current contracts. Comments submitted on this form do not constitute or imply authorization to waive any portion of the referenced document(s) or to amend contractual requirements.

(Fold along this line)

(Fold along this line)

NO POSTAGE NECESSARY IF MAILED IN THE UNITED STATES

OFFICIAL BUSINESS
PENALTY FOR PRIVATE USE $300

BUSINESS REPLY MAIL
FIRST CLASS PERMIT NO. 12062 WASHINGTON, D.C.

POSTAGE WILL BE PAID BY DEPARTMENT OF THE ARMY

Commander
U.S. Army Aviation Systems Command
ATTN: AMSAV-ELS
4300 Goodfellow Boulevard
St. Louis, MO 63120-1798

Downloaded from http://www.everyspec.com

STANDARDIZATION DOCUMENT IMPROVEMENT PROPOSAL

(See Instructions – Reverse Side)

1. DOCUMENT NUMBER	2. DOCUMENT TITLE
MIL-STD-1290A(AV)	LIGHT FIXED AND ROTARY WING AIRCRAFT CRASH RESISTANCE

3a. NAME OF SUBMITTING ORGANIZATION

b. ADDRESS *(Street, City, State, ZIP Code)*

4. TYPE OF ORGANIZATION *(Mark one)*

- ☐ VENDOR
- ☐ USER
- ☐ MANUFACTURER
- ☐ OTHER *(Specify)*: _____

5. PROBLEM AREAS

a. Paragraph Number and Wording:

b. Recommended Wording:

c. Reason/Rationale for Recommendation:

6. REMARKS

7a. NAME OF SUBMITTER *(Last, First, MI)* – Optional

b. WORK TELEPHONE NUMBER *(Include Area Code)* – Optional

c. MAILING ADDRESS *(Street, City, State, ZIP Code)* – Optional

8. DATE OF SUBMISSION *(YYMMDD)*

DD FORM 82 MAR 1426

EDITION OF 1 OCT 76 IS OBSOLETE