T30/T10 Intelligent Flight Battery

User Guide
使用說明
ユーザーガイド
사용자 가이드
คู่มือการใช้งาน
Hướng dẫn sử dụng
Benutzerhandbuch
Guía de usuario
Guide d'utilisateur
Guida all'uso
Gebruikershandleiding
Manual do utilizador
Guia do Usuário
Руководство пользователя

V1.0 2021.01

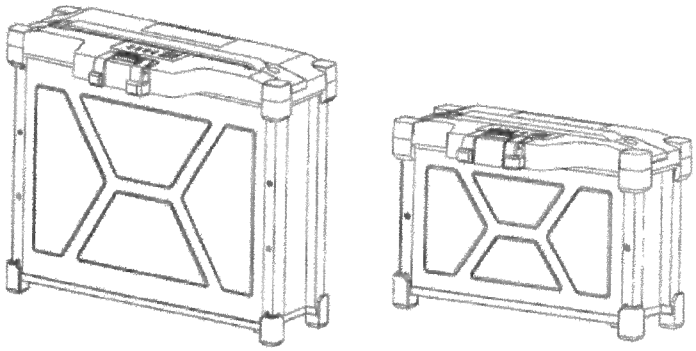

Contents

EN	User Guide	2
CHT	使用說明	11
JP	ユーザーガイド	18
KR	사용자 가이드	27
TH	คู่มือการใช้งาน	35
VI	Hướng dẫn sử dụng	42
DE	Benutzerhandbuch	51
ES	Guía de usuario	61
FR	Guide d'utilisateur	70
IT	Guida all'uso	80
NL	Gebruikershandleiding	89
PT	Manual do utilizador	98
PT-BR	Guia do Usuário	107
RU	Руководство пользователя	117
Compliance Information		127

Disclaimer

Congratulations on purchasing your new DJI™ product. Read this entire document and all safe and lawful practices DJI provided carefully before use. Failure to read and follow instructions and warnings may result in serious injury to yourself or others, damage to your DJI product, or damage to other objects in the vicinity. By using this product, you hereby signify that you have read this document carefully and that you understand and agree to abide by all terms and conditions of this document and all relevant documents of this product. You agree to only use this product for purposes that are proper. You agree that you are solely responsible for your own conduct while using this product, and for any consequences thereof. DJI accepts no liability for damage, injury, or any legal responsibility incurred directly or indirectly from the use of this product.

DJI is a trademark of SZ DJI TECHNOLOGY CO., LTD. (abbreviated as "DJI") and its affiliated companies. Names of products, brands, etc., appearing in this document are trademarks or registered trademarks of their respective owner companies. This product and document are copyrighted by DJI with all rights reserved. No part of this product or document shall be reproduced in any form without the prior written consent or authorization of DJI.

This document and all other collateral documents are subject to change at the sole discretion of DJI. For up to date product information, visit www.dji.com and click on the product page for this product.

This document is available in various languages. In the event of divergence among different versions, the English version shall prevail.

Read Before First Use

The following terms are used in this document and on the warning labels on the product to indicate various levels of potential harm when operating this product:

ⓘ CAUTION: Procedures which, if not properly followed, create a possibility of physical property damage AND a small possibility of injury.

⚠ WARNING: Procedures which, if not properly followed, create the probability of property damage, collateral damage, and serious injury OR a high probability of superficial injury.

This product must be operated with caution and expertise. Failure to operate this product in a safe and responsible manner could result in injury or damage to the product or other property. This product is not intended for use by those who are under 18 years old. DO NOT alter this product or use this product with incompatible components. This document contains instructions for safety, operation, and maintenance. It is essential to read and follow all of the instructions and warnings herein, prior to assembly, setup, or use, in order to operate the product correctly and avoid damage or serious injury.

Introduction

The T30 Intelligent Flight Battery applies to DJI AGRAS™ T30 and has a capacity of 29000 mAh at a nominal voltage of 51.8 V, while the T10 Intelligent Flight Battery applies to DJI Agras T10 and has a capacity of 9500 mAh with the same voltage. The metal shell and rubber caps effectively protect the battery, and the high energy battery cells and the advanced power management system provide long-lasting power to an aircraft.

The T10 Intelligent Flight Battery is used as an example below.

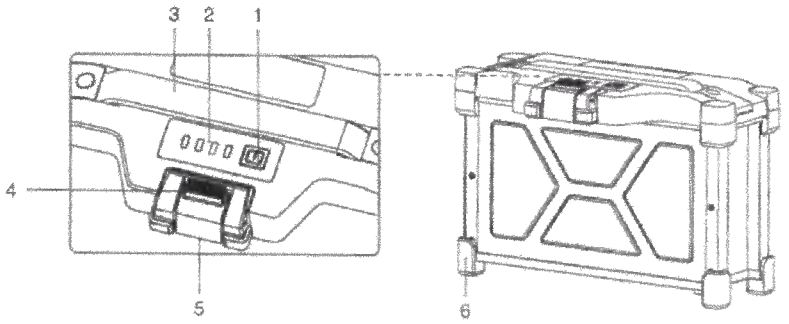

1. **Power Button**
   Press to check the battery power level. Press and then press and hold to power on the battery. Only power the battery on and off when it is connected to the aircraft. Otherwise, the power ports on the battery and the aircraft will be damaged.
2. **Status LEDs**
   Indicate the battery level. From left to right: LED 1, LED 2, LED 3 and LED 4.
3. **Handle**
   Use the handle to carry the battery.
4. **Clamp**
   Use the clamp to firmly attach the battery to the aircraft. Press the clamp to remove the battery from the aircraft.
5. **Power Port**
   Connects to an aircraft, battery station, or multifunctional inverter generator.
6. **Rubber Caps**
   Protect the battery.

Battery Functions

1. Battery Level Display: The status LEDs indicate the current battery level. Press the power button to check.
2. Communication: Battery parameters including the voltage and power level are transmitted to the aircraft to enable the aircraft to take appropriate action when battery parameters change.
3. Charging Error Detection: Errors that occur during charging are indicated by the status LEDs. When an error occurs, disconnect the battery and wait for the battery to fix the error automatically. For more information, refer to the LED Patterns section.
4. Battery Error Records: The battery records errors such as excessive charging or discharging, exceeding the temperature range when charging and discharging, and storing a battery for an extended period with the power level outside of the recommended range. The battery error records can be accessed by authorized DJI dealers when troubleshooting or repairing.
5. Auto Balancing: In certain situations, the battery automatically balances the voltages of the cells.
6. Auto Discharging: If fully charged for more than one day, the battery automatically discharges to 97%. After 7 days, it automatically discharges to 60%.
7. Auto Current Adjustment: When using with the provided battery station, the battery intelligently adjusts the charging current based on the temperature of the battery cell. The battery also supports self-protection based on the environment temperature.
8. Temperature Control: The battery ensures the temperature difference between the battery cells are the same and stay within the allowable temperature range.

⚠
- Refer to the safety requirements listed on the label of the battery before using for the first time. Users accept full responsibility for any violations of the safety requirements stated on the label.
- The product warranty is void if any battery errors occur due to misuse of the battery.

Using the Battery

Press and then press and hold the power button to power on the battery after it is connected to the aircraft. When the aircraft lands and the motors stop, press and then press and hold the power button to power off the battery, and then disconnect the battery from the aircraft.

⚠
- DO NOT use or leave the battery near heat sources such as a furnace or heater. DO NOT leave the battery inside a vehicle on hot days.
- DO NOT allow the battery to come into contact with any liquid. DO NOT leave the battery near a source of moisture and DO NOT use the battery in humid environments. Otherwise, the battery may corrode, potentially resulting in the battery catching fire or exploding.

⚠ • DO NOT use swollen, leaking, or damaged batteries. If your battery is abnormal, contact an authorized DJI dealer for further assistance.

- Make sure the battery is powered off before connecting to or disconnecting from the aircraft. DO NOT connect or disconnect the battery while it is powered on. Otherwise, the power ports may be damaged.
- The battery should be used in the temperature range of -5° to 45° C (23° to 113° F). Use of batteries in environments above 50° C (122° F) can lead to fire or an explosion. Use of the battery in temperatures below -5° C (23° F) can negatively affect the performance of the battery. The battery can be used again when it returns to a normal temperature.
- DO NOT use the battery in strong electrostatic or electromagnetic environments or near high-voltage transmission lines. Otherwise, the battery circuit board may malfunction, which could cause a serious flight hazard.
- DO NOT disassemble or pierce a battery in any way or it may leak, catch fire, or explode.
- The electrolytes in the battery are highly corrosive. If any electrolytes make contact with your skin or eyes, immediately wash the affected area with water and see a doctor immediately.
- DO NOT use a battery that has been dropped. Dispose of the battery as described in the Battery Disposal section.
- If the battery falls into water while inserted in an aircraft during flight, take it out immediately, and put it in a safe and open area. DO NOT use the battery again and dispose of it properly as described in the Battery Disposal section.
- DO NOT put the battery in a microwave oven or a pressurized container.
- DO NOT place the battery on or near wires or other metal objects such as eyeglasses, watches, jewelry, and hairpins. Otherwise, the battery ports may be short-circuited.
- DO NOT drop or strike batteries. DO NOT place heavy objects on the batteries or station. Avoid dropping batteries.
- Always use a clean, dry cloth when cleaning the battery terminals.
- DO NOT fly when the battery power level is below 15%.
- Make sure the battery is correctly connected. Otherwise, the battery may overheat or even explode due to abnormal charging. Only use approved batteries from authorized dealers. DJI assumes no responsibility for any damaged caused by using batteries that are unapproved.
- Make sure to lift the battery by the handle. DO NOT lift it by holding the cables.
- Make sure the battery is placed on a flat surface.
- DO NOT place anything on a battery. Otherwise, the battery may be damaged, which may lead to fire hazards.
- The battery is heavy. Be careful when moving the battery to avoid dropping it. If the battery is dropped and damaged, immediately leave the battery in an open area away from people. Wait 30 minutes and soak the battery in water for 24 hours. After making sure the power has completely run out, dispose of the battery in accordance with local laws.

- Make sure the battery is fully charged before each flight.
- Immediately land the aircraft if a critical battery level warning appears and replace with a fully charged battery.
- Before operating in a low-temperature environment, make sure the battery is at least above 5° C (41° F). Ideally, above 20° C (68° F).

LED Patterns

The Battery Level Indicators will show the current battery level and status during charging and discharging. The indicators are defined below:

LED is on LED is blinking
LED is off

Checking Battery Level

If the battery is in power saving mode, press the power button once to check the current battery level.

LED1	LED2	LED3	LED4	Battery Level
●	●	●	●	88-100%
●	●	●	◐	75-87%
●	●	●	○	63-74%
●	●	◐	○	50-62%
●	●	○	○	38-49%
●	◐	○	○	25-37%
●	○	○	○	13-24%
◐	○	○	○	0-12%

LED Patterns During Charging

During charging, the LEDs blink in sequence to indicate the current battery level. Disconnect the battery when charging is complete, and always use the officially recommended charging device to charge the battery.

LED1	LED2	LED3	LED4	Battery Level
◐	◐	○	○	0-49%
◐	◐	◐	○	50-74%
◐	◐	◐	◐	75-99%
●	●	●	●	100%

Battery Error LED Patterns

The table below shows battery protection mechanisms and corresponding LED patterns.

LED1	LED2	LED3	LED4	Blinking Pattern	Battery Exception Item
				LED2 blinks twice per second	Overcurrent detected
				LED2 blinks three times per second	The battery system is abnormal
				LED3 blinks twice per second	Overcharged detected
				LED3 blinks three times per second	Charging device over-voltage
				LED4 blinks twice per second	Charging temperature is too low
				LED4 blinks three times per second	Charging temperature is too high
				All 4 LEDs blink fast	The battery is abnormal and unavailable

In the event of charging temperature protection occurring the battery will resume charging once the temperature has returned to within the allowable range. If one of the other battery protection mechanisms activates, to resume charging once the issue has been resolved it is necessary to first press the Power button to turn the battery off, unplug the battery from the charging device, and then plug it back in to resume charging.

⚠
- DJI does not take any responsibility for damage caused by third-party charging devices.
- DO NOT charge the battery near flammable materials or on flammable surfaces such as carpet or wood. DO NOT leave the battery unattended during charging. There should be a distance of at least 30 cm between the battery station and any charging batteries. Otherwise, the battery station or charging batteries may be damaged by excessive heating and may even lead to a fire hazard.
- DO NOT charge the battery immediately after flight. The battery temperature may be too high and may cause serious damage to the battery. Allow the battery to cool down to close to room temperature before charging. Charge the battery at a temperature range of 0° to 60° C (32° to 140° F). The ideal charging temperature range is 22° to 28° C (72° to 82° F). Charging at the ideal temperature range can prolong battery life.
- In scenarios that meet the following two conditions simultaneously, the battery can be charged immediately after flight:
  a. The temperature of the flight environment was below 30° C.
  b. The temperature of the charging environment is below 30° C and there is no direct sunlight.
- DO NOT charge the battery near heat sources such as a furnace or heater.
- Regularly check the terminals and battery ports. DO NOT clean the battery using alcohol or other inflammable liquid. DO NOT use a damaged battery station.
- Keep the battery dry at all times.

- The battery stops charging when charging is complete. It is recommended to disconnect the battery once charging is complete.
- Make sure the battery is powered off before charging. Otherwise, the battery ports may be damaged.

Battery Storage

Disconnect the battery from the aircraft and check if there is any buildup in the battery port.

Make sure to follow the illustration below when transporting or storing a T30 Intelligent Flight Battery.

When using the battery safety box, make sure that the cooling bottles inside the box have been filled with water or salt water.

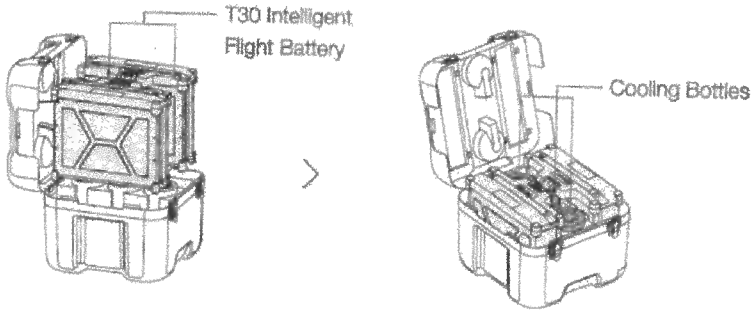

The battery can also be placed in the battery safety box when charging. Connect the battery with the charging cable of a compatible charging device, place the battery into the battery safety box with the battery power port facing outward, and tighten the lock.

- The battery safety box can only be used with the T30 Intelligent Flight Battery.
- Power off and disconnect the battery from the aircraft during transportation.
- Keep batteries out of the reach of children and animals. Seek professional medical support immediately if children swallow parts of the battery.
- If the battery level is critically low, charge the battery to a power level of 40% to 60%. DO NOT store a battery with a low power level for an extended period. Otherwise, the performance will be negatively affected.
- DO NOT leave the battery near heat sources such as a furnace or heater. DO NOT leave the battery inside a vehicle on hot days.
- The battery must be stored in a dry environment.
- DO NOT place the battery near explosive or hazardous material or near metal objects such as eyeglasses, watches, jewelry, and hairpins.
- DO NOT attempt to transport a battery that is damaged or has more than 30% power. Discharge the battery to 30% or lower before transportation.
- Make sure the battery is placed on a flat surface.

- If storing the battery for more than three months, it is recommended to store the battery in a battery safety bag or battery safety box in an environment at a temperature range from -20° to 40° C (-4° to 104° F).
- DO NOT store the battery for an extended period after fully discharging. Doing so may over-discharge the battery and cause irreparable damage to the battery cell.
- If a battery with a low power level has been stored for an extended period, the battery will be in deep hibernation mode. Charge to wake the battery.
- Disconnect the battery from the aircraft if you intend to store the battery for an extended period.

Battery Disposal

- Before disposing, make sure to soak the battery in water for 24 hours to completely discharge the battery. Dispose of the battery in specific recycling boxes. DO NOT place the battery in regular waste containers. Strictly follow your local regulations regarding the disposal and recycling of batteries.

- If the battery cannot be discharged completely, DO NOT dispose of the battery in a battery recycling box directly. Contact a professional battery recycle company for assistance.

Battery Maintenance

- DO NOT splash the battery with water. An excessive amount of water will damage the battery.
- DO NOT store the battery when the temperature is outside the range of -20° to 45° C (-4° to 113° F).
- If the battery is not used for an extended period, the battery life may be reduced.
- Fully charge and discharge the battery at least once every three months to ensure the performance of the battery.
- If a battery has not been charged or discharged for five months or more, the battery will no longer be covered by the warranty.

Specifications

Specifications	T30 Intelligent Flight Battery (BAX501-29000mAh-51.8V)	T10 Intelligent Flight Battery (BAX501-9500mAh-51.8V)
Nominal Voltage	51.8 V	
Battery Type	Lithium Battery 14S	
Discharge Rate	11.5 C	
Operating Temperature Range	-5° C to 45° C (23° F to 113° F)	
Charging Temperature Range	0° C to 60° C (32° F to 113° F)	
Warranty Details	1,000 charge cycles or 12 months (whichever is sooner)	
IP Rating	IP54 + Board-level potting protection	
Compatible Aircraft	DJI Agras T30	DJI Agras T10
Compatible Charging Device	T30 Intelligent Battery Station, D9000i Multifunction Inverter Generator	T10 Intelligent Battery Station, D4500i Multifunction Inverter Generator
Capacity	29000 mAh	9500 mAh
Energy	1502 Wh	430 Wh
Max Charging Power	7200 W	3600 W
Battery Charging Time*	9-12 mins when the battery station is connected with two AC power cables; 18-25 mins when the battery station is connected with one AC power cable	7-10 mins
Weight	Approx. 10.2 kg	Approx. 3.8 kg

* Tested in a lab environment at a temperature of 25° C (77° F) using a T30/T10 Intelligent Battery Station.

T30/T10
Intelligent Battery Station

User Guide
使用說明
ユーザーガイド
사용자 가이드
คู่มือการใช้งาน
Hướng dẫn sử dụng
Bedienungsanleitung
Guía del usuario
Guide de l'utilisateur
Guida dell'utente
Gebruiksaanwijzing
Manual do utilizador
Guia do usuário
Руководство пользователя

v1.0 2021.02

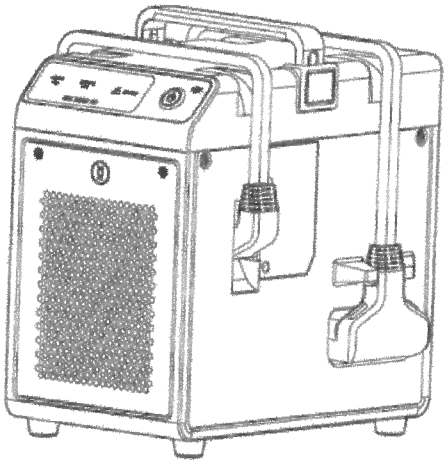

Contents

EN	User Guide	4
CHT	使用說明	13
JP	ユーザーガイド	20
KR	사용자 가이드	29
TH	คู่มือการใช้งาน	37
VI	Hướng dẫn sử dụng	46
DE	Bedienungsanleitung	55
ES	Guía del usuario	64
FR	Guide de l'utilisateur	73
IT	Guida dell'utente	82
NL	Gebruiksaanwijzing	91
PT	Manual do utilizador	100
PT-BR	Guia do Usuário	109
RU	Руководство пользователя	118
Compliance Information		128

© 2021 Gui All Rights Reserved

EN	In the Box	VI	Trong hộp	NL	In de doos
CHT	物品清單	DE	Lieferumfang	PT	Incluído na embalagem
JP	同梱物リスト	ES	Contenido del embalaje	PT-BR	Incluído na embalagem
KR	구성품	FR	Contenu de l'emballage	RU	Комплект поставки
TH	ภายในกล่อง	IT	Contenuto della confezione		

T30 Intelligent Battery Station

× 1

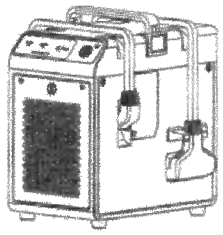

× 2

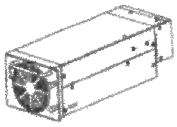

T30 Intelligent Battery Station
T30 智能充電管家
T30 インテリジェントバッテリーステーション
T30 인텔리전트 배터리 스테이션
เครื่องชาร์จแบตเตอรี่อัจฉริยะ T30
Trạm sạc thông minh T30
T30 Intelligent Battery Station
Estación de Baterías Inteligentes T30
Station de batteries intelligente T30
Stazione di ricarica per batteria intelligente T30
T30 Intelligent Battery Station
Estação de bateria inteligente T30
Estação de bateria inteligente T30
Зарядная станция для аккумуляторов

CPX-3000W Switching Power Supply*
CPX-3000W 開關電源模組 *
CPX-3000W スイッチング電源 *
CPX-3000W 스위칭 전력 공급 장치 *
สวิตชิ่งเพาเวอร์ซัพพลาย CPX-3000W*
Bộ chuyển đổi nguồn điện CPX-3000W*
CPX-3000W Schaltnetzteil*
Fuente de alimentación de conmutación CPX-3000W*
Commutation de l'alimentation électrique CPX-3000W*
Alimentatore a commutazione CPX-3000W*
CPX-3000W-schakelvoeding*
Fonte de alimentação alternada CPX-3000W*
Fonte de alimentação de comutação CPX-3000W*
Импульсный источник питания CPX-3000W*

* CPX-3000W Switching Power Supply is not included in the package for some regions. Please contact DJI or a DJI authorized dealer for further information.
* 部分國家或地區包裝內不含 CPX-3000W 開關電源模組。請聯繫 DJI 或 DJI 授權經銷商。
* CPX-3000W スイッチング電源は一部地域ではパッケージに含まれておりません。詳細情報については DJI または DJI 正規代理店にお問い合わせください。
* CPX-3000W 스위칭 전력 공급 장치는 일부 지역에서 패키지에 포함되지 않습니다. 추가적인 정보는 DJI 또는 공인 DJI 딜러에 문의하십시오.
* สวิตชิ่งเพาเวอร์ซัพพลาย CPX 3000W ไม่ได้รวมอยู่ในแพ็กเกจสำหรับบางภูมิภาค โปรดติดต่อ DJI หรือตัวแทนจำหน่ายที่ได้รับอนุญาต DJI เพื่อข้อมูลเพิ่มเติม
* Tại một số khu vực, gói sản phẩm không bao gồm bộ chuyển đổi nguồn điện CPX-3000W. Vui lòng liên hệ với DJI hoặc đại lý ủy quyền của DJI để biết thêm thông tin.
* CPX-3000W Schaltnetzteil ist in manchen Regionen nicht im Paket enthalten. Bitte kontaktieren Sie DJI oder wenden Sie sich an einen DJI-Vertragshändler für weitere Informationen.
* En algunas regiones, la fuente de alimentación de conmutación CPX-3000W no se incluye en el embalaje. Póngase en contacto con DJI o con cualquier distribuidor autorizado de DJI para obtener más información.

 © 2021 DJI All Rights Reserved.

T10 Intelligent Battery Station

× 1

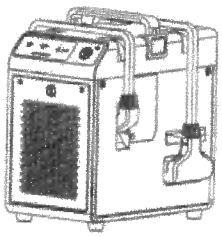

T10 Intelligent Battery Station
T10 智能充電管家
T10 インテリジェント バッテリーステーション
T10 인텔리전트 배터리 스테이션
เครื่องชาร์จแบตเตอรี่อัจฉริยะ T10
Trạm sạc thông minh T10
T10 Intelligent Battery Station
Estación de Baterías Inteligentes T10
Station de batteries intelligente T10
Stazione di ricarica per batteria intelligente T10
T10 Intelligent Battery Station
Estação de bateria inteligente T10
Estação de bateria inteligente T10
Зарядная станция для аккумуляторов

× 1

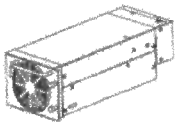

CPX-3000W Switching Power Supply*
CPX-3000W 開關電源模組 *
CPX-3000W スイッチング電源 *
CPX-3000W 스위칭 전력 공급 장치 *
สวิตชิ่งเพาเวอร์ซัพพลาย CPX-3000W*
Bộ chuyển đổi nguồn điện CPX-3000W*
CPX-3000W Schaltnetzteil*
Fuente de alimentación de conmutación CPX-3000W*
Commutation de l'alimentation électrique CPX-3000W*
Alimentatore a commutazione CPX-3000W*
CPX-3000W-schakelvoeding*
Fonte de alimentação alternada CPX-3000W*
Fonte de alimentação de comutação CPX-3000W*
Импульсный источник питания CPX-3000W*

* La commutation de l'alimentation électrique CPX-3000W n'est pas incluse dans l'emballage pour certaines régions. Pour plus d'informations, veuillez contacter DJI ou un revendeur DJI agréé.
* L'alimentatore a commutazione CPX-3000W non è incluso nella confezione per alcune regioni. Per ulteriori informazioni, contattare DJI o un rivenditore autorizzato DJI.
* CPX-3000W-schakelvoeding is voor sommige regio's niet in het pakket opgenomen. Neem contact op met DJI of een erkende DJI-dealer voor meer informatie.
* A fonte de alimentação alternada CPX-3000W não está incluída na embalagem em algumas regiões. Contacte a DJI ou um revendedor autorizado para mais informações.
* A fonte de alimentação de comutação CPX-3000W não está incluída no pacote de algumas regiões. Entre em contato com a DJI ou com um revendedor autorizado da DJI para mais informações.
* В некоторых регионах импульсный источник питания CPX-3000W не входит в комплект. Для получения более подробной информации обратитесь в DJI или к официальному представителю DJI.

© 2021 DJI All Rights Reserved

Disclaimer

Congratulations on purchasing your new DJI™ product. Read this entire document and all safe and lawful practices DJI provided carefully before use. Failure to read and follow instructions and warnings may result in serious injury to yourself or others, damage to your DJI product, or damage to other objects in the vicinity. By using this product, you hereby signify that you have read this document carefully and that you understand and agree to abide by all terms and conditions of this document and all relevant documents of this product. You agree to only use this product for purposes that are proper. You agree that you are solely responsible for your own conduct while using this product, and for any consequences thereof. DJI accepts no liability for damage, injury, or any legal responsibility incurred directly or indirectly from the use of this product.

DJI is a trademark of SZ DJI TECHNOLOGY CO., LTD. (abbreviated as "DJI") and its affiliated companies. Names of products, brands, etc., appearing in this document are trademarks or registered trademarks of their respective owner companies. This product and document are copyrighted by DJI with all rights reserved. No part of this product or document shall be reproduced in any form without the prior written consent or authorization of DJI.

This document and all other collateral documents are subject to change at the sole discretion of DJI. For up to date product information, visit http://www.dji.com and click on the product page for this product.

This document is available in various languages. In the event of divergence among different versions, the English version shall prevail.

Warning

1. The power cable of the AC input current is 16 A. Use a power outlet that can provide a current exceeding 16 A for the T10 Intelligent Battery Station and use two separate power outlets of a total current exceeding 32 A for the T30 Intelligent Battery Station. A certain power margin is required for safety.
2. DO NOT connect two AC power cables to one power outlet when using the T30 Intelligent Battery Station indoors to avoid short circuiting.
3. This product is used to charge aircraft that are used in plant protection operations. Before using such aircraft, make sure you understand and comply with the local laws and regulations and, if required, have obtained corresponding approval and clearance from the related government agencies.
4. DO NOT use this product under direct sunlight, in rain, or in a damp environment.
5. Keep the battery station away from heat, pressure, water, flammable gases, and corrosives.
6. The battery station should be kept in an environment with a temperature range of -5° to 45° C (23° to 113° F).
7. Place the battery station on a flat and stable surface. In order to prevent fire hazards, make sure the device is properly insulated and that there is sufficient space for ventilation (at least 50 cm).
8. In case of fire, make sure to use a dry powder fire extinguisher. A liquid fire extinguisher may lead to an electrical hazard.
9. DO NOT unplug the AC cable or charging cable while the battery station is in use. Remove batteries after charging is complete.
10. If there is any noticeable buildup, wipe the battery station or power ports with a clean, dry cloth.
11. DO NOT use the battery station during a thunderstorm.
12. Refer to the user guide of the batteries for more safety instructions before use.

13. DO NOT hold the charging cables to carry the battery station. Otherwise, the cables may be damaged.
14. DO NOT use the battery station in an area where batteries are stored. There should be a distance of at least 30 cm between the battery station and any charging batteries. Otherwise, the battery station or charging batteries may be damaged by excessive heating and may even lead to a fire hazard.
15. Keep the battery station away from inflammable materials while charging. DO NOT place the battery station or charging batteries on a blanket or any carpeted surfaces when in use.
16. For activation or firmware updates, the battery station can be connected to the DJI ASSISTANT™ 2 for MG or the remote controller of the T10, T30, or T20. Make sure the remote controller has been updated to the latest version before activating or updating the battery station.

Introduction

The T30/T10 Intelligent Battery Station can connect with up to two batteries. While charging, the battery station monitors the status of the batteries and can automatically adjust the charging current if required. The battery station continues to charge even if the ventilation holes are blocked.

Users can check the battery charging status LEDs and the warning indicator on the operation panel of the battery station to confirm if there are any errors. The battery station can be connected to a remote controller using a USB-C cable and users can launch the DJI MG or DJI AGRAS™ app to check more detailed information regarding any errors. Additionally, the battery station has the following functions: overcurrent protection, overcharging protection, under-voltage protection, overheating protection, and status display.

The general descriptions in this user guide apply to both the T30 Intelligent Battery Station and T10 Intelligent Battery Station. The illustrations in this user guide may vary from the actual product. The T30 Intelligent Battery Station is used as an example below.

Overview

Battery Station

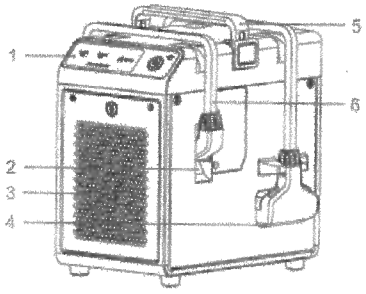

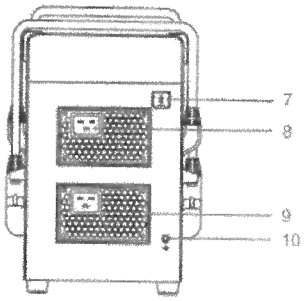

1. Operation Panel
2. Charging Cables Clamp
3. Front Panel Dustproof Cover
4. Charging Cables Storage
5. Handle
6. Charging Cable
7. USB-C Port Cover
8. AC Power Port
9. AC Power Dustproof Cover
10. GND Port

© 2021 DJI All Rights Reserved.

Operation Panel

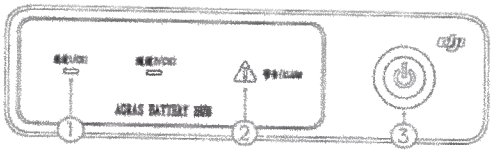

1. **Charging Status LED × 2**
   Each LED indicates the charging status of the battery connected to a charging cable. The numbers (1-2) correspond to the position of the charging cable on the battery station.
2. **Warning Indicator**
   The warning indicator will be on if the battery station detects any abnormalities. If the indicator turns solid yellow, connect the battery station to a remote controller using a USB-C cable to confirm if there are any errors. If the indicator turns solid red, stop charging immediately. Only start to charge again once the indicator is no longer solid red.
3. **Power Button**
   Press to power the battery station on and off. It is recommended to press the power button and unplug the AC power cable to power off the station.

Mounting the Battery Station

If the CPX-3000W switching power supply has not been mounted to the battery station before leaving the factory, follow the instructions below to mount.

1. Loosen the screws and remove the front panel.

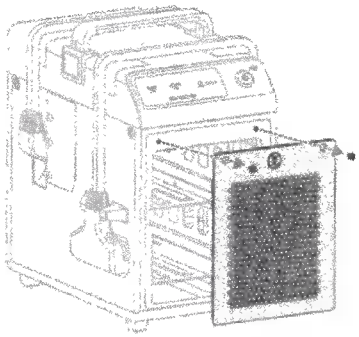

2. Insert the CPX-3000W switching power supply into the battery station as shown below. The T30 Intelligent Battery Station has two CPX-3000W switching power supplies while the T10 Intelligent Battery Station has one.

 © 2021 DJI All Rights Reserved.

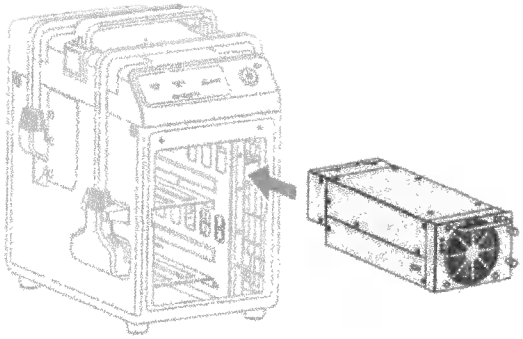

T30 Intelligent Battery Station:

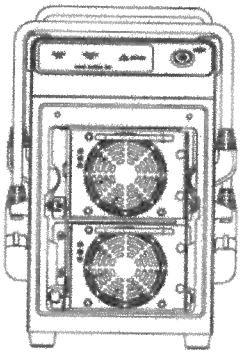

T10 Intelligent Battery Station:

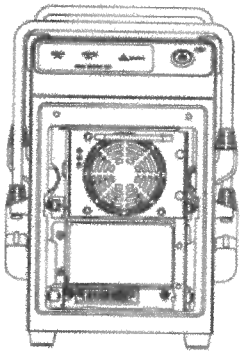

3. Attach the panel and secure using the screws.

Activation

The battery station requires activation before using for the first time. If the warning indicator is solid green, it means the battery station has not been activated. Follow the steps below to activate the battery station:

Method 1: Using the DJI MG App or DJI Agras App

1. Connect the battery station to a power outlet.
2. Connect the battery station to the remote controller using a USB-C cable.
3. Press the power button to power on the battery station.
4. Run the app and follow the prompts to finish activation.

Method 2: Using DJI Assistant 2 for MG

1. Connect the battery station to a power outlet.
2. Connect the battery station to the PC using a USB-C cable.
3. Visit www.dji.com to download DJI Assistant 2 for MG. Install and run the software.
4. Press the power button to power on the battery station.

5. Use your DJI account to log in and click "Battery Station / Inverter Generator" and follow the prompts to finish activation.

Make sure the PC or smart device is connected to the internet during activation.

Using the Battery Station

Up to two batteries can be connected to the T30/T10 Intelligent Battery Station. Follow the instructions below to use the battery station.

1. Connect the battery station to a power outlet.

When using the T30 Intelligent Battery Station, each AC power cable must be connected to a separate AC power outlet or power strip with a rated current of more than 16 A.

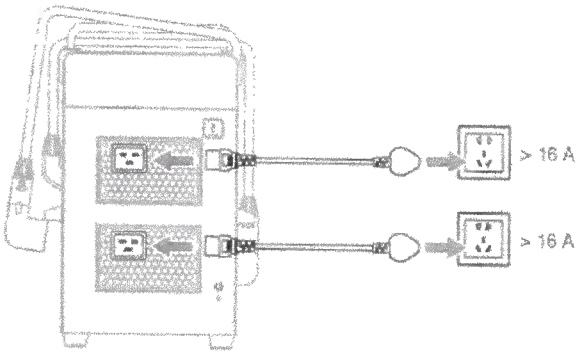

2. Connect the battery to the battery station.

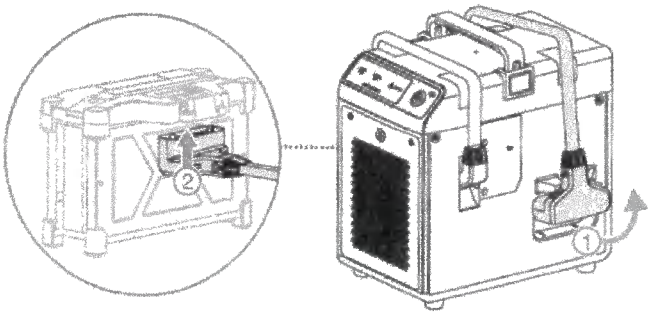

When using the T30 Intelligent Battery Station indoors, it is recommended to use only one AC power cable, which reduces the maximum output power by half.

Make sure to place the charging battery on the same side that the charging cable is fixed to the battery station.

 © 2021 DJI All Rights Reserved

3. Make sure all cables are correctly connected and press the power button on the operation panel of the battery station. The two LEDs and the warning indicator will flash simultaneously. After powering on, the only lights remaining will be the charging status LEDs which represent the batteries currently connected. This indicates that self-diagnosis is complete and the device is working normally. For more information about how to check if there are any errors during self-diagnosis, refer to the LEDs and Warning Indicator Description. Alternatively, connect the battery station to a remote controller and launch the DJI MG or DJI Agras app for more detailed information about the errors.
4. If no errors are detected during self-diagnosis, the battery station will begin to charge the batteries. If two batteries are connected simultaneously, the battery station will charge them in order of their power level, starting from highest to lowest.

⚠
- Before use, make sure there are no obvious defects on the battery station or batteries (e.g., jams, breakages, or short circuits).
- DO NOT power the battery station on unless the batteries are correctly connected.
- The battery station will automatically adjust the charging current based on the condition of the batteries being charged. For example, if the battery temperature is below 15° C (59° F), the charging current will be limited and the charging time will be longer. The charging time depends on the battery model and battery temperature. The lower the battery temperature, the longer the charging time will be. The charging temperature range varies depending on the battery model. Refer to the user guide of the battery to check the charging temperature range.

LEDs and Warning Indicator Description

During charging, the status LED will blink when the corresponding charging battery is experiencing an abnormality due to the cable being disconnected, a high or low temperature, overvoltage, or overcurrent. Once charging is complete, the status LED will be solid green. The battery can be disconnected from the battery station.

Battery Station Status:

LEDs	Warning Indicator	Power Button Indicator	Description
/	Solid green	/	The battery station is ready to be activated, or under loader stage
Solid yellow	Solid yellow	Solid green	Self-diagnosis and power supply of the battery station are normal
/	/	Solid green	The battery station is ready to connect to a battery
Solid yellow	Blinks yellow twice continuously	/	The battery station logs are being exported and it has stopped charging. Restart the battery station after the logs have been exported

Charging Indicators:

LED Blinking Pattern	Warning Sound	Description
Solid yellow	/	The battery in the corresponding position to the number is connected and queued to charge
Blinks green	/	The battery in the corresponding position to the number is charging

© 2021 DJI All Rights Reserved.

Solid green	/	The battery in the corresponding position to the number is fully charged
Blinks yellow three times continuously	/	The temperature of the battery in the corresponding position to the number is too low and the battery station has stopped charging
Blinks yellow four times continuously	/	The temperature of the battery in the corresponding position to the number is too high and the battery station has stopped charging
Blinks red once continuously	Beeps once continuously	The battery in the corresponding position is not correctly connected or an unauthorized battery is connected. This warning will only appear 10 seconds after the battery is connected
Blinks red twice continuously	Beeps twice continuously	The connector short-circuited. Check the battery or the battery station
Solid red	Beeps three times continuously	Critical error detected

The warning indicator will light up if one of the following problems occur while using the battery station:

Warning Indicator	Warning Sound	Description
Solid yellow	/	Main board is abnormal and the power is limited
Blinks yellow once continuously	/	The CPX-3000W switching power supply is abnormal and the power is limited
Blinks red once continuously	/	The CPX-3000W switching power supply is unavailable or the fan stalled
Blinks red once continuously	Beeps once continuously	The CPX-3000W has experienced a critical error and there is no output
Solid red	Beeps twice continuously	Main board is abnormal and unavailable

If there are any abnormalities, connect the battery station to a remote controller and run the DJI MG or DJI Agras app to check more information. If the app indicates that a module is abnormal or broken, contact DJI or a DJI authorized dealer.

Updating Firmware

Follow the instructions below to update the firmware using the remote controller or DJI Assistant 2 for MG. Users will be notified through the app when firmware updates are available.

Using Remote Controller

1. Connect the battery station to a remote controller using a USB-C cable and connect the battery station to a power outlet.
2. Power on the remote controller and press the power button on the operation panel to power on the battery station.
3. Run the DJI MG or DJI Agras app and follow the prompts to update the firmware. Make sure the remote controller remains connected to the internet while updating.

 © 2021 DJI All Rights Reserved

Using DJI Assistant 2 for MG

1. Download DJI Assistant 2 for MG at https://www.dji.com/t30/downloads or https://www.dji.com/t10/downloads.
2. Launch DJI Assistant 2 for MG and log in with your DJI account.
3. Power on the battery station and connect the station to a computer via the USB-C port.
4. Select "Battery Station / Inverter Generator" and click on Firmware Updates on the left panel.
5. Select the firmware version that you wish to update to.
6. Wait for the firmware to download. The firmware update will start automatically.
7. The station will reboot automatically after the firmware update is complete.

⚠
- Before using the battery station, make sure there are no obvious defects on the ports or cables of the battery station (e.g., jams, breakages, or short circuits).
- DO NOT connect the batteries while updating the firmware of the battery station.
- DO NOT disconnect the battery station while updating the firmware of the battery station.
- Make sure the computer is connected to the internet.
- Retry if update fails.

Storage and Maintenance

Battery Station Storage

When the battery station is not in use, disconnect the batteries from the battery station and the battery station from the power outlet. Follow the steps below to safely secure the charging cables.

1. After disconnecting a battery, wrap the charging cable over the battery station.
2. Make sure the end of the charging cable is securely attached to the corresponding storage on the side of the battery station.

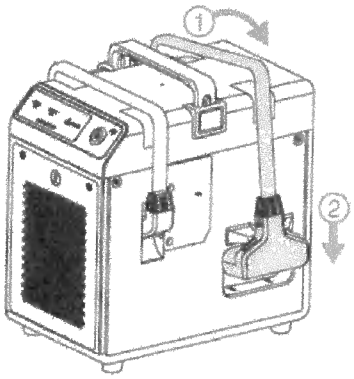

⚠
- DO NOT store this product under direct sunlight, in rain, or in a damp environment.
- Keep the battery station away from heat, pressure, water, flammable gases, and corrosives.

© 2024 DJI All Rights Reserved

Battery Station Maintenance

Clean the AC power dustproof cover and front dustpoof cover regularly to ensure the charging performance is unaffected.

Specifications

Specifications	T30 Intelligent Flight Battery (Model: CHX503-7000)	T10 Intelligent Flight Battery (Model: CHX503-3000)
Operating Temperature Range	-5° to 45° C (23° to 113° F)	
Dimensions	300x280x230 mm	
Output Channel	2	
Compatible Battery	T30 Intelligent Flight Battery	T10/T16/T20 Intelligent Flight Battery
Weight	Approx. 5.5 kg (without CPX-3000W Switching Power Supply)	Approx. 5.1 kg (without CPX-3000W Switching Power Supply)

Note: Refer to the CPX-3000W Switching Power Supply Product Information for current, input and output voltage.

 © 2021 DJI All Rights Reserved.

AGRAS T30/T10

DISCLAIMER AND SAFETY GUIDELINES

免責事項と安全に関するガイドライン

การปฏิเสธความรับผิดและแนวทางความปลอดภัย

TỪ CHỐI VÀ HƯỚNG DẪN AN TOÀN

HAFTUNGSAUSSCHLUSS UND SICHERHEITSHINWEISE

RENUNCIA DE RESPONSABILIDAD E INSTRUCCIONES DE SEGURIDAD

AVIS DE NON-RESPONSABILIT ET INSTRUCTIONS DE S CURIT

ISEN O DE RESPONSABILIDADE E INSTRU ES DE SEGURAN A

v1.0 2021.04

Contents

EN DISCLAIMER AND SAFETY GUIDELINES 2

JP 免責事項と安全に関するガイドライン 11

TH การปฏิเสธความรับผิดและแนวทางความปลอดภัย 20

VI TỪ CHỐI VÀ HƯỚNG DẪN AN TOÀN 28

DE HAFTUNGSAUSSCHLUSS UND SICHERHEITSHINWEISE 37

ES RENUNCIA DE RESPONSABILIDAD E INSTRUCCIONES DE SEGURIDAD 47

FR AVIS DE NON-RESPONSABILIT ET INSTRUCTIONS DE S CURIT 57

PT-BR ISEN O DE RESPONSABILIDADE E INSTRU ES DE SEGURAN A 67

COMPLIANCE INFORMATION 77

© 2021 DJI All Rights Reserved

Safety at a Glance

The AGRAS™ T30/T10 aircraft is not a toy and is not suitable for children under the age of 18.
Note that the Safety at a Glance section only provides a quick overview of the safety tips. Make sure you read and understand this document and the Agras T30/T10 User Manual.

1. **Pesticide Usage**
   - **Avoid** the use of **powder pesticides** as much as possible as they may reduce the service life of the spraying system.
   - **Pesticides are poisonous and pose serious risks to safety. Only use them in strict accordance with their specifications.**
   - Residue on the equipment caused by splashes or spills **when pouring and mixing the pesticide can irritate your skin**. Make sure to clean the equipment after mixing.
   - Use **clean water** to mix the pesticide and filter the mixed liquid before pouring into the spray tank to **avoid blocking** the strainer. **Clear any blockage** before using the equipment.
   - Make sure to **stay in an upwind area** when spraying pesticide to avoid bodily harm.
   - **Wear protective clothing** to prevent direct body contact with the pesticide. **Rinse your hands and skin** after handling pesticides. **Clean the aircraft and remote controller** after applying the pesticide.
   - Effective use of pesticides depends on **pesticide density, spray rate, spray distance, aircraft speed, wind speed, wind direction, temperature, and humidity**. Consider all factors when using pesticides, but DO NOT compromise the safety of people, animals, or the environment in doing so.
   - **DO NOT contaminate** rivers and sources of drinking water.
   - Disposal of surplus spray: Planning the spray operation helps to ensure only enough pesticide for the area to be treated is purchased and the amount of surplus spray solution is kept to a minimum. It is recommended that any surplus spray or washing liquid in the tank be applied to the crops. Users may also consider installing a pipeline to handle the disposal of the washing liquid in the tank.
   - DO NOT use strong acids, strong bases, high-temperature liquids, or pesticides that are explicitly prohibited.

2. **Environmental Considerations**
   - Fly at locations that are **clear of buildings and other obstacles. DO NOT fly above or near large crowds.**
   - DO NOT fly over **4.5 km (14,763 ft) above sea level.**
   - Only fly in moderate weather conditions with temperatures **between 0° and 45° C (32° and 113° F).**
   - Make sure that your operations do not violate any applicable laws or regulations, and that you have obtained all appropriate prior authorizations. Consult the relevant government agency or authority, or your lawyer before flight to ensure you comply with all relevant laws and regulations.
   - **DO NOT operate any part of the aircraft indoors.**

3. **Pre-Flight Checklist**

   Make sure to check all of the following:
   - Remote controller and aircraft batteries are **fully charged.**
   - All parts are **in good condition**. Replace aged or broken parts before flight.
   - **Landing gear and spray tank** are firmly in place.
   - **Propellers and frame arms are unfolded and arm locks are firmly tightened.** Propellers are **in good condition and firmly tightened.** There is **nothing obstructing the motors and propellers.**
   - There is nothing obstructing the position on the aircraft shell where the upward radar is located underneath.
   - **Spraying system is not blocked** and works properly.
   - **Compass is calibrated** after being prompted to do so in the app.

4. **Ingress Protection Rating Description**

   When functioning normally, the aircraft is waterproof, dustproof, and corrosion resistant. Under stable laboratory conditions, the aircraft (Intelligent Flight Battery excluded) has a protection rating of IP67 (IEC 60529) and can be cleaned using a small amount of water. However, this protection rating is not permanent and may reduce over time after long-term use due to aging and wear. The product warranty does not cover water damage.

   The protection ratings of the aircraft mentioned above may decrease in the following scenarios:
   - There is a collision and the seal structure is deformed.
   - The seal structure of the shell is cracked or damaged.
   - The waterproof covers are not properly secured.

5. **Operation**
   - **Stay away** from the **rotating** propellers and motors.
   - Make sure to fly **within the specified max takeoff weight** to avoid potential safety risks.
   - The DJI Agras app will intelligently recommend the payload weight limit for the tank according to the current status and surroundings of the aircraft. **Do not exceed the recommended payload weight limit** when adding material to the tank. Otherwise, the flight safety may be affected.
   - Maintain a visual line of sight (VLOS) of your aircraft at all times.
   - DO NOT use the Combination Stick Command (CSC) or other methods to **stop the motors** when the aircraft is airborne unless in an emergency situation.
   - DO NOT answer incoming calls during flight. DO NOT fly under the influence of **alcohol or drugs.**
   - If there is **a low battery warning, land the aircraft at a safe location.**
   - **If the radar module is unable to work properly in the operating environment**, the aircraft will be **unable to avoid obstacles during Return to Home (RTH)**. All that can be adjusted is **the flight speed and altitude**, as long as the remote controller is still connected.
   - After landing, stop the motors, **power off the aircraft, and turn off the remote controller**. Otherwise, the aircraft may enter Failsafe RTH automatically due to remote controller signal loss.
   - **Maintain full control of the aircraft at all times and do not rely on the DJI Agras app.** The obstacle avoidance function is disabled in certain situations. Keep the aircraft within VLOS and pay close attention to its flight. Use your discretion to operate the aircraft and manually avoid obstacles in a timely manner. It is important to set an appropriate Failsafe and RTH altitude before each flight.

6. **Maintenance and Upkeep**
   - DO NOT use aged, chipped, or broken propellers.
   - To avoid damaging the landing gear, **remove or empty the spray tank** during transportation or when not in use.
   - Recommended storage temperature (when the spray tank, flow meter, pumps, and hoses are empty): **between -20° and 40° C (-4° and 104° F).**
   - Clean the aircraft immediately after spraying. Inspect the aircraft regularly. Refer to the Product Care section for more information about maintenance guidelines.

7. **Observe Local Laws and Regulations**
   - You can find a list of DJI™ GEO zones at http://www.dji.com/flysafe. Note that the DJI GEO zones are not a replacement for local government regulations or good judgment.
   - **Avoid flying at altitudes above 100 m (328 ft).***

* The flying altitude limit varies in different countries or regions. Make sure to fly at the altitudes outlined by local laws and regulations.

© 2021 DJI All Rights Reserved.

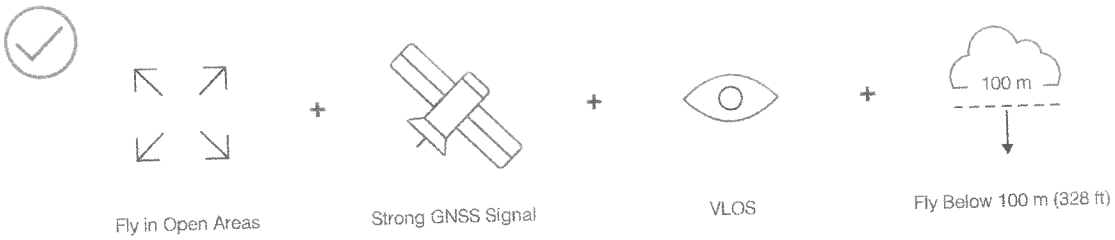

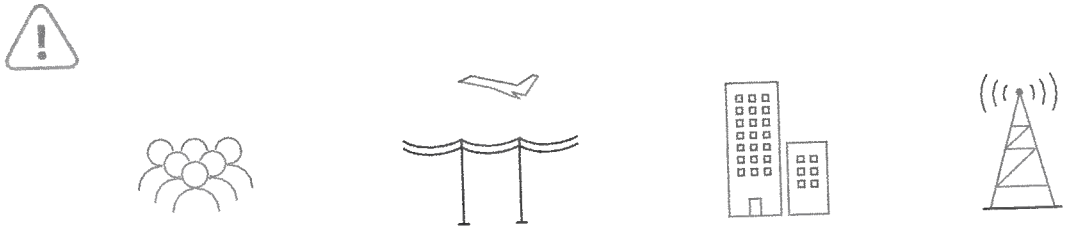

Avoid flying over or near crowds, high voltage power lines, or bodies of water.
Strong electromagnetic sources such as **power lines, base stations, and tall buildings** may affect the onboard compass.

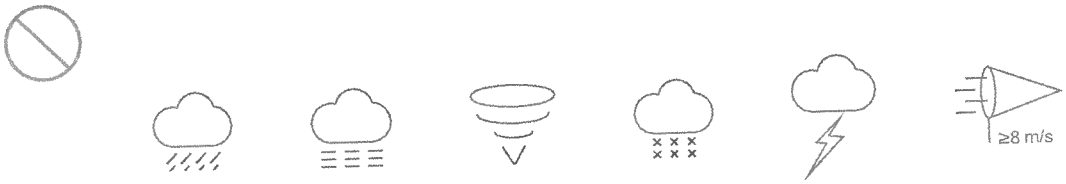

DO NOT use the aircraft in adverse weather conditions such as winds exceeding 28 kph (17 mph), heavy rain (precipitation rate exceeding 25 mm (0.98 in) in 12 hours), fog, snow, lightning, tornadoes, or hurricanes.

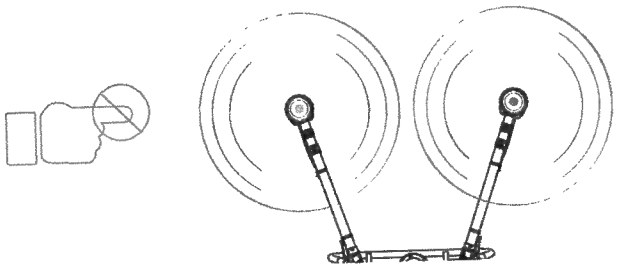

Stay away from rotating propellers and motors.

GEO Zones

Learn more at:
http://www.dji.com/flysafe

© 2021 DJI All Rights Reserved.

Notice

All instructions and other collateral documents are subject to change at the sole discretion of SZ DJI TECHNOLOGY CO., LTD. For up-to-date product information, visit http://www.dji.com and click on the product page.

Glossary

The following terms are used throughout the product literature to indicate various levels of potential harm when operating this product:

NOTICE Procedures, which if not properly followed, create a possibility of physical property damage and possibility of injury.

CAUTION Procedures, which if not properly followed, create the probability of physical property damage and possibility of serious injury.

⚠ WARNING Procedures, which if not properly followed, create the probability of property damage, collateral damage, and serious injury or create a high probability of serious injury.

⚠ WARNING

Read the entire user manual to become familiar with the features of this product before operating. Failure to operate this product in a safe and responsible manner can result in damage to the product or personal property and cause serious injury. This is a sophisticated product. It must be operated with caution and common sense and requires some basic mechanical ability. This product is not intended for use by children. Do not use with incompatible components or alter this product in any way outside of the documents provided by SZ DJI TECHNOLOGY CO., LTD. These safety guidelines contain instructions for safety, operation, and maintenance. It is essential to read and follow all of the instructions and warnings in the user manual, prior to assembly, setup or use, in order to operate the product correctly and avoid damage or serious injury.

Pre-Flight Checklist

Make sure to check all of the following:

1. Only use genuine parts in good condition.
2. Remote controller and aircraft batteries are fully charged. If using an external Intelligent Battery, it is still necessary to make sure that the internal battery has some power. Otherwise, the remote controller cannot be powered on.
3. Propellers are in good condition and mounted onto the motors correctly and securely.
4. Propellers and frame arms are unfolded and arm locks are firmly tightened.
5. Motors are mounted securely and start and function normally.
6. Landing gear, spray tank, and Intelligent Flight Battery are firmly in place.
7. All parts are mounted securely, and cables are connected correctly and firmly.
8. There is nothing obstructing the D-RTK™ antennas, OCUSYNC™ antennas, or the position on the aircraft shell where the upward radar is located underneath.
9. The aircraft firmware and DJI Agras app have been updated to the latest versions.
10. Your flight area is outside any GEO zones and flight conditions are suitable for flying the aircraft.
11. Make sure that you are not flying under the influence of alcohol, drugs, or any substance that may impair your cognitive abilities.
12. Be familiar with the selected flight mode and understand all safety functions and warnings.
13. Be sure to observe all local regulations, obtain appropriate authorizations, and understand the risks. It is solely your responsibility to comply with all flight regulations.
14. The DJI Agras app is properly launched to assist your operation of the aircraft. Without the flight data recorded by the DJI Agras app and stored in your remote controller, in certain situations such as the loss of your aircraft, DJI may not be able to provide aftersales support or assume liability.

Disclaimer and Warnings

This product is NOT a toy and is not suitable for children under the age of 18. Adults should keep the aircraft out of reach of children and DO NOT operate this aircraft in the presence of children.

Inappropriate use of the product could result in personal injury or property damage. Read the materials associated with the product before using the product for the first time. These documents are included in the product package and are also available online on the DJI product page at http://www.dji.com.

This product is a multirotor flying platform intended for agricultural applications in farmland, woodland, and orchards only. It offers easy flight when in good working order as set forth below. Visit http://www.dji.com for the most current instructions and warnings and https://www.dji.com/flysafe for more information about flight safety and compliance.

The information in this document affects your safety and your legal rights and responsibilities. Read this entire document carefully to ensure proper configuration before use. Failure to read and follow the instructions and warnings in this document may result in product loss, serious injury to you, or damage to your aircraft.

By using this product, you hereby signify that you have read this disclaimer and the user manual carefully and that you understand and agree to abide by the terms and conditions herein. EXCEPT AS EXPRESSLY PROVIDED IN DJI AFTERSALES SERVICE POLICIES AVAILABLE AT (HTTP://WWW.DJI.COM/SERVICE), THE PRODUCT AND ALL MATERIALS, AND CONTENT AVAILABLE THROUGH THE PRODUCT ARE PROVIDED "AS IS" AND ON AN "AS AVAILABLE" BASIS, WITHOUT WARRANTY OR CONDITION OF ANY KIND. EITHER EXPRESS OR IMPLIED. DJI DISCLAIMS ALL WARRANTIES OF ANY KIND, EXCEPT AS EXPRESSLY PROVIDED IN DJI AFTERSALES SERVICE POLICIES, WHETHER EXPRESS OR IMPLIED, RELATING TO THE PRODUCT, PRODUCT ACCESSORIES, AND ALL MATERIALS, INCLUDING: (A) ANY IMPLIED WARRANTY OF MERCHANTABILITY, FITNESS FOR A PARTICULAR PURPOSE, TITLE, QUIET ENJOYMENT, OR NON-INFRINGEMENT; AND (B) ANY WARRANTY ARISING OUT OF COURSE OF DEALING, USAGE, OR TRADE. DJI DOES NOT WARRANT, EXCEPT AS EXPRESSLY PROVIDED IN DJI LIMITED WARRANTY, THAT THE PRODUCT, PRODUCT ACCESSORIES. OR ANY PORTION OF THE PRODUCT, OR ANY MATERIALS, WILL BE UNINTERRUPTED, SECURE, OR FREE OF ERRORS, VIRUSES, OR OTHER HARMFUL COMPONENTS, AND DO NOT WARRANT THAT ANY OF THOSE ISSUES WILL BE CORRECTED.

NO ADVICE OR INFORMATION, WHETHER ORAL OR WRITTEN, OBTAINED BY YOU FROM THE PRODUCT, PRODUCT ACCESSORIES, OR ANY MATERIALS WILL CREATE ANY WARRANTY REGARDING DJI OR THE PRODUCT THAT IS NOT EXPRESSLY STATED IN THESE TERMS. YOU ASSUME ALL RISKS FOR ANY DAMAGE THAT MAY RESULT FROM YOUR USE OF OR ACCESS TO THE PRODUCT, PRODUCT ACCESSORIES, AND ANY MATERIALS. YOU UNDERSTAND AND AGREE THAT YOU USE THE PRODUCT AT YOUR OWN DISCRETION AND RISK, AND THAT YOU ARE SOLELY RESPONSIBLE FOR ANY PERSONAL INJURY, DEATH, DAMAGE TO YOUR PROPERTY (INCLUDING YOUR COMPUTER SYSTEM OR MOBILE DEVICE OR DJI HARDWARE USED IN CONNECTION WITH THE PRODUCT) OR THIRD PARTY PROPERTY, OR THE LOSS OF DATA THAT RESULTS FROM YOUR USE OF OR INABILITY TO USE THE PRODUCT. SOME JURISDICTIONS MAY PROHIBIT A DISCLAIMER OF WARRANTIES AND YOU MAY HAVE OTHER RIGHTS THAT VARY FROM JURISDICTION TO JURISDICTION.

DJI is a trademark of SZ DJI TECHNOLOGY CO., LTD. and its affiliated companies. Names of products, brands, etc., appearing in this document are trademarks or registered trademarks of their respective owner companies.

Limitation of Liability

IN NO EVENT WILL THE DJI ENTITIES BE LIABLE TO YOU FOR ANY INDIRECT, INCIDENTAL, SPECIAL, CONSEQUENTIAL OR PUNITIVE DAMAGES (INCLUDING DAMAGES FOR LOSS OF PROFITS, GOODWILL, OR ANY OTHER INTANGIBLE LOSS) ARISING OUT OF OR RELATING TO YOUR ACCESS TO OR USE OF, OR YOUR INABILITY TO ACCESS OR USE, THE PRODUCT, PRODUCT ACCESSORIES, OR ANY MATERIALS, FLIGHT ENVIRONMENT DATA, WHETHER BASED ON WARRANTY, CONTRACT, TORT

 © 2021 DJI All Rights Reserved.

(INCLUDING NEGLIGENCE), STATUTE, OR ANY OTHER LEGAL THEORY, AND WHETHER OR NOT ANY DJI ENTITY HAS BEEN INFORMED OF THE POSSIBILITY OF DAMAGE.

EXCEPT AS OTHERWISE AGREED UPON BETWEEN YOU AND DJI, THE AGGREGATE LIABILITY OF THE DJI ENTITIES TO YOU FOR ALL CLAIMS ARISING OUT OF OR RELATING TO THE USE OF OR ANY INABILITY TO USE ANY PORTION OF THE PRODUCT OR OTHERWISE UNDER THESE TERMS, WHETHER IN CONTRACT, TORT, OR OTHERWISE, IS LIMITED TO $100.

Data Storage and Usage

When you use our mobile apps or our products or other software, you may provide DJI with data regarding the use and operation of the product, such as flight telemetry data (e.g., speed, altitude, battery life, and information about the gimbal and camera) and operations record. Refer to DJI Privacy Policy (available at dji.com/policy) for more information.

DJI reserves the right to update this disclaimer and safety guidelines. Visit http://www.dji.com periodically for the latest version. This disclaimer is available in various languages. In the event of divergence among different versions, the English version shall prevail.

Before You Begin

The following documents have been produced to help you safely operate and make full use of your aircraft:

1. In the Box
2. Disclaimer and Safety Guidelines
3. Quick Start Guide
4. User Manual

Check all of the included parts listed in the corresponding in the box document and read the disclaimer and safety guidelines before flight. Complete the assembly and learn the basic operations with the help of the quick start guide and the video tutorial on the official DJI website (http://www.dji.com). Refer to the user manual on the official DJI website for more comprehensive information. Make sure you fully understand the functionality of each individual part, the flight condition requirements, the key contingency warning functions and systems, and all government regulations before each flight. If you have any questions or problems during the assembly, maintenance, or use of this product, contact DJI or a DJI authorized dealer.

Individual Parts

Regarding Genuine and Functional Parts

⚠ WARNING

To avoid component malfunction, serious injury, and property damage, observe the following rules:

1. **Use only genuine DJI parts or parts certified by DJI. Unauthorized parts or parts from non-DJI certified manufacturers may cause system malfunctions and compromise safety.**
2. **Make sure there are no foreign objects inside of the aircraft or its components, such as water, oil, soil, or sand.**
3. **Make sure the aircraft and its components are all in good working order, damage-free, and functioning well. Components include, but are not limited to, the remote controller, compass, propulsion system, radar module, and spraying system.**

Remote Controller

⚠ WARNING

To avoid component malfunction, serious injury, and property damage, observe the following rules:

1. **Use the ports on the remote controller in strict accordance with their specifications.**
2. **Make sure that the display device on the remote controller has access to the internet (via Wi-Fi or a SIM card). Otherwise, flight records cannot be uploaded to a DJI server and therefore DJI may not be able to provide warranty repair services to you and can assume no liability for any related losses you incur.**

NOTICE

1. Make sure the remote controller is fully charged before each flight.
2. If the remote controller has not been used for five minutes while it is powered on and is not connected to the aircraft, it will sound an alert. After 10 seconds, it will automatically power off. Move the sticks or perform another action to cancel the alert.
3. To achieve optimal transmission quality, make sure the antennas of the remote controller are unfolded and adjusted to the proper position.
4. The GNSS in the remote controller is inside the place above the flight mode switch, as shown in the figure. For the GNSS to function properly, make sure that it is facing the sky without any blockage and place the remote controller horizontally.

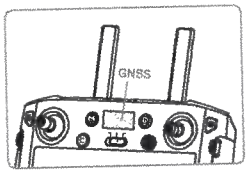

5. Contact DJI Support to repair the remote controller if damaged. A damaged antenna will greatly decrease performance.
6. Replacement remote controllers have to be linked to the aircraft. After linking, make sure that the transmission distance can reach 300 m before using. Refer to the user manual for more information on linking instructions.
7. Fully charge and discharge the internal and external batteries of the remote controller at least once every three month.
8. Immediately charge the internal or external battery of the remote controller when its power level decreases to 0% to prevent the device being damaged due to over discharge for an extended period. Discharge the batteries to a power level between 40% and 60% if stored for an extended period.
9. Upon linking an aircraft to a remote controller, any other link the aircraft had to any other controller is dropped. As such, all aircraft linked to a remote controller that is in Multi-Aircraft Control mode can only be controlled by that remote controller. To control any aircraft using a different remote controller, that aircraft must be manually linked to the remote controller using the DJI Agras app.
10. DO NOT cover the air outlet on the remote controller. Otherwise, the remote controller may become too hot, which could affect its performance.
11. DO NOT obstruct the RTK dongle when used.

Aircraft Body

⚠ WARNING

To avoid component malfunction, serious injury, and property damage, observe the following rules:

1. **Use the ports on the aircraft body in strict accordance with their specifications.**
2. **DO NOT short circuit the ports on the aircraft body.**
3. **Be careful when assembling or cleaning the aircraft as some parts of the aircraft body are sharp.**
4. **For T30: fold the M3 and M5 arms followed by the M2 and M6 arms and make sure that the arms are inserted into the storage clamps on both sides of the aircraft. Otherwise, the arms may be damaged. Lift and lower the M1 and M4 arms gently to reduce wear and tear. For T10: fold the M3 and M4 arms followed by the M1 and M2 arms and make sure that the arms are inserted into the storage clamps on both sides of the aircraft. Otherwise, the arms may be damaged.**
5. **When using the RTK function, operate in an open environment free from radio interference. DO NOT obstruct the D-RTK antennas when used.**
6. **DO NOT obstruct the OcuSync antennas.**
7. **When operating at night, DO NOT look directly at the spotlight to avoid damaging your eyes.**
8. **DO NOT touch or let your hands or body come in contact with the heat sinks when powering on or after flight as they may be hot.**
9. **If the USB-C port is not in use, make sure to attach the waterproof cover. Otherwise, water may enter the port which can short circuit.**

© 2021 DJI All Rights Reserved.

Flight Battery

⚠ WARNING

To avoid component malfunction, serious injury, and property damage, observe the following rules:

1. **Only use official DJI flight batteries.**
2. **The voltage on the aircraft can reach 58.8 V. Read the battery's safety guidelines and take necessary precautions when handling the batteries to ensure your own safety.**
3. **DO NOT splash the battery with an excessive volume of water.**

Compass

CAUTION

To avoid component malfunction, serious injury, and property damage, observe the following rule:

1. Land immediately when obvious drifting occurs in flight such as if the aircraft does not fly in a straight line.

NOTICE

Calibrate the compass when the app prompts you to do so. Observe the following rules when calibrating your compass:

1. It is important to calibrate the compass. The calibration result will affect the flight safety. The aircraft may malfunction if the compass is not calibrated.
2. DO NOT calibrate your compass where there is a chance of strong magnetic interference. This includes areas where there are utility poles or walls with steel reinforcements.
3. DO NOT carry ferromagnetic materials with you during calibration such as keys or mobile phones.
4. If the aircraft status indicators show a blinking red light, compass calibration has failed. Please recalibrate.
5. After calibrating successfully, the compass may be abnormal when you place the aircraft on the ground. This may be because of underground magnetic interference. Move the aircraft to another location and try again.

Propulsion System

⚠ WARNING

To avoid serious injury to yourself or others, which may be caused by the rotating propellers and motors, observe the following rules:

Propellers

1. **Check if the propellers are in good condition before each flight. Replace aged, chipped, or broken propellers.**
2. **Power off the aircraft before touching the propellers.**
3. **Be aware of the sharp edges of the propellers when mounting or removing the propellers.**
4. **Make sure that propellers are unfolded and firmly tightened before each flight.**
5. **Stay away from the rotating propellers and motors to avoid injuries.**

Motors

1. **Make sure that the motors are securely mounted and rotating smoothly.**
2. **DO NOT attempt to modify the structure of the motors.**
3. **DO NOT touch or let your hands or body come in contact with the motors after flight as they may be hot.**

CAUTION

To avoid component malfunction, serious injury, and property damage, observe the following rules:

1. DO NOT block any of the ventilation holes on the motors

NOTICE

1. Keep the motors free of dust.
2. If a motor is stuck and unable to rotate freely, execute the CSC to stop the motors immediately.
3. Make sure the sound of the motors when powering on is normal.

Spraying System

⚠ WARNING

To avoid component malfunction, serious injury, and property damage, observe the following rules:

Pesticide Usage

1. **Avoid the use of powder pesticides as much as possible as they may reduce the service life of the spraying system.**
2. **Pesticides are poisonous and pose serious risks to safety. Only use them in strict accordance with their specifications.**
3. **Residue on the equipment caused by splashes or spills when pouring and mixing the pesticide can irritate your skin. Make sure to clean the equipment after mixing.**
4. **Use clean water to mix the pesticide and filter the mixed liquid before pouring into the spray tank to avoid blocking the strainer. Clear any blockage before using the equipment.**
5. **Make sure to stay in an upwind area when spraying pesticide to avoid bodily harm.**
6. **Wear protective clothing to prevent direct body contact with the pesticide. Rinse your hands and skin after handling pesticides. Clean the aircraft and remote controller after applying the pesticide.**
7. **Effective use of pesticides depends on pesticide density, spray rate, spray distance, aircraft speed, wind speed, wind direction, temperature, and humidity. Consider all factors when using pesticides, but DO NOT compromise the safety of people, animals, or the environment in doing so.**
8. **DO NOT contaminate rivers and sources of drinking water.**

Sprinklers

1. **Avoid using insoluble pesticides such as wettable powder.**
2. **The sprinklers are delicate parts. Clean them immediately after use.**
3. **DO NOT bend the hose in an arc tighter than its minimum bend radius. This is to avoid creasing, which may compromise the spraying effect.**
4. **Make sure to securely tighten the hose nuts to avoid liquid leakage.**

Spray Tank

1. **Make sure that the spray tank is firmly in place to avoid liquid leakage.**
2. **The spray tank load must not exceed the specified max value. Refer to the specifications of each aircraft model for more information.**

Spherical Radar System

⚠ WARNING

To avoid component malfunction, serious injury, and property damage, observe the following rules:

1. **DO NOT touch or let your hands or body come in contact with the metal parts of the radar module when powering on or immediately after flight as they may be hot.**
2. **Maintain full control of the aircraft at all times and do not rely on the radar module and DJI Agras app. Keep the aircraft within VLOS at all times. Use your discretion to operate the aircraft manually to avoid obstacles.**
3. **As shown in the figure below, the omnidirectional digital radar has a horizontal obstacle detection range of 360° and a vertical obstacle detection range of ±15° while the detection distance range is 1.5 to 30 m. Note that the aircraft cannot sense obstacles that are not within the detection range. Fly with caution. For the four gray areas in the figure, the detection performance of the radar module may be reduced due to the obstruction of the frame arms and landing gear. Fly with caution. The effective detection distance varies depending on the size and material of the obstacle. When sensing objects such as buildings that have a radar cross section (RCS) of more than -5 dBsm, the effective detection distance is 20 to 30 m. When sensing objects such as power lines that have a RCS of -10 dBsm, the effective detection distance is approximately 15 m. When sensing objects such as**

 © 2021 DJI All Rights Reserved.

dry tree branches that have a RCS of -15 dBsm, the effective detection distance is approximately 10 m. Obstacle sensing may malfunction or be invalid in areas outside of the effective detection distance.

4. When mounting the omnidirectional digital radar, make sure the arrow mark is pointing towards the aircraft front.

T30

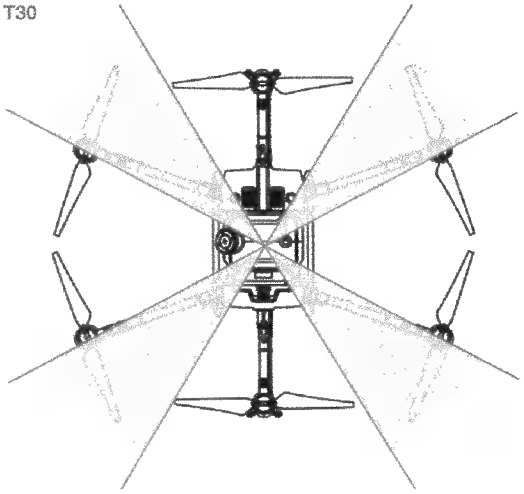

T10

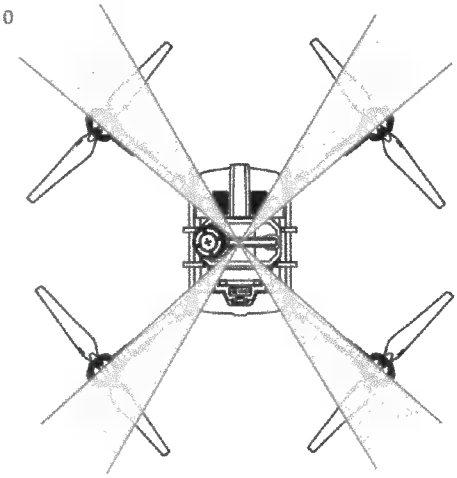

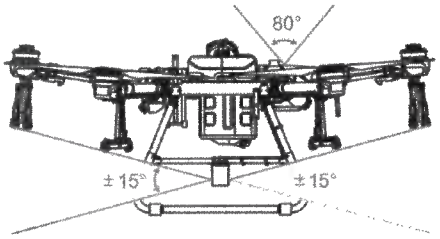

NOTICE

1. Comply with local radio transmission laws and regulations.
2. The sensitivity of the radar module may be reduced when operating several aircraft within a short distance. Operate with caution.
3. The obstacle avoidance functions are disabled in Attitude mode.
4. DO NOT attempt to disassemble any part of the radar module that has already been mounted prior to shipping.
5. The radar module is a precision instrument. DO NOT squeeze, tap, or hit the radar module

Omnidirectional Digital Radar

1. Before use, make sure that the radar module is clean and the outer protective cover is not cracked, chipped, sunken, or misshapen
2. Obstacle avoidance is adversely affected due to the obstruction of the aircraft body when aircraft pitch exceeds 15°. Slow down and fly with caution
3. The radar module enables the aircraft to maintain a fixed distance from vegetation only within its working range. Observe the aircraft's distance from vegetation at all times.
4. When sensing objects that have a vertical inclination of more than 5° such as an inclined line or inclined utility pole, the sensitivity of the radar module may be reduced. Fly with caution.
5. Operate with extra caution when flying over inclined surfaces. Recommended maximum inclination at different aircraft speeds: 10° at 1 m/s, 6° at 3 m/s, and 3° at 5 m/s
6. Land the aircraft on flat ground to avoid damage to the radar module from raised objects.

Upward Radar

1. DO NOT block the position on the aircraft shell where the upward radar is located underneath. Otherwise, upward obstacle avoidance may be affected.
2. Make sure the position on the aircraft shell where the upward radar is located underneath is not cracked, chipped, or misshapen. Otherwise, upward obstacle avoidance may be affected.

Firmware

⚠ WARNING

To avoid component malfunction, serious injury, and property damage, observe the following rule:

1. **Keep people and animals at a safe distance during any firmware update, system calibration, and parameter setting procedures.**

NOTICE

1. For safety, always update to the latest firmware version.
2. Only use official DJI firmware.
3. Make sure to update the remote controller's firmware to the latest version after you update the aircraft's firmware.
4. The remote controller may become unlinked from the aircraft after updating. Re-link the remote controller and aircraft
5. Make sure to check all connections and remove the propellers from the motors before performing the firmware update

DJI Agras App

NOTICE

1. Make sure to fully charge the remote controller batteries before launching the DJI Agras App.
2. Read all safety tips, warning messages, and disclaimers carefully. Be familiar with the related regulations in your area. You are solely responsible for being aware of all relevant regulations and flying in a way that is compliant. Make sure to pay close attention in the following situations:
   a. Using the auto-take off and auto-landing features.
   b. Setting the altitude beyond the default limit
3. Land your aircraft immediately if a prompt appears in the app.
4. Examine and check all warning messages on the aircraft status list displayed in the app prior to each flight
5. Cache the map data of the area where you intend to fly the aircraft by connecting to the internet before each flight

4G Dongle

NOTICE

1. A dongle and SIM card are required for some product features in the DJI Agras app and users will bear the cost of these extras.
2. Be sure to use a DJI approved dongle

© 2021 DJI All Rights Reserved

3. DJI accepts no liability for accidents caused by the loss of user data or aircraft malfunctions originating from third party dongles and SIM cards.
4. Only use SIM cards that are compatible with the dongle.
5. Make sure you mount the dongle and the SIM card correctly. Otherwise, related functions will not be available.

EN

Product Care

Storage and Transportation

⚠ WARNING

To avoid component malfunction, serious injury, and property damage, observe the following rules:

1. Small parts, such as cables and straps, are dangerous if swallowed. Keep all parts out of reach of children and animals.
2. Make sure to remove the battery from the aircraft during transportation.
3. Remove or empty the spray tank during transportation or when not in use to avoid damaging the landing gear. Store the aircraft in a cool dry place.

Maintenance

⚠ WARNING

To avoid component malfunction, serious injury, and property damage, observe the following rules:

1. Clean all parts of the aircraft at the end of each day of spraying after the aircraft returns to a normal temperature. DO NOT clean the aircraft immediately after operations are completed.
   a. Fill the spray tank with clean water or soapy water and spray the water through the nozzles until the tank is empty. Repeat the step two more times.
   b. Detach the spray tank and spray tank connector to clean them (for T10 only). Remove the spray tank strainer, nozzle strainers, and nozzles to clean them and clear any blockage. Afterwards, immerse them in clean water for 12 hours.
   c. Make sure that the aircraft structure is completely connected so that it can be washed directly with water. It is recommended to use a spray washer filled with water to clean the aircraft body and wipe with a soft brush or wet cloth before removing water residue with a dry cloth.
   d. If there is dust or pesticide liquid on the motors, propellers, or heat sinks, wipe them with a wet cloth before cleaning the remaining water residue with a dry cloth.
   e. Store the cleaned aircraft in a dry environment.
2. Wipe the surface and screen of the remote controller with a clean wet cloth that has been wrung out with water daily after operations.
3. Inspect the aircraft every 100 flights or after flying for over 20 hours:
   a. Check for and replace worn propellers.
   b. Check for loose propellers. Replace propellers and propeller washers if needed.
   c. Check for aging plastic or rubber parts.
   d. Check for poor atomization of the nozzles. Clean nozzles thoroughly or replace them.
   e. Replace nozzle strainers and the spray tank strainer.
4. DO NOT attempt to repair the aircraft. Contact DJI Support or a DJI authorized dealer if any parts are damaged.

NOTICE

1. Keep the protective cover of the radar module clean. Clean the surface with a soft damp cloth and air dry before using again.
2. Keep the FPV camera clean. First remove any larger pieces of grit or sand then wipe the lens with a clean, soft cloth to remove dust or other dirt.
3. In the event of a crash or collision, make sure to thoroughly inspect every part of the aircraft and make any necessary repairs and replacements before your next flight. If you have any problems or questions, contact DJI Support or a DJI authorized dealer.

Flight Condition Requirements

Weather Conditions and Surrounding Environment

⚠ WARNING

The aircraft is designed to operate in good to moderate weather conditions. To avoid collision, serious injury, property damage or imposing health hazards, observe the following rules:

1. DO NOT use the aircraft in adverse weather conditions such as winds exceeding 28 kph (17 mph), heavy rain (precipitation rate exceeding 25 mm (0.98 in) in 12 hours), snow, or fog.
2. To prevent health hazards to nearby people and to ensure effective spray, operate the aircraft to spray in wind speeds below 18 kph (11 mph).
3. Keep the aircraft at least 10 m (30 ft) away from obstacles, people, animals, buildings, public infrastructure, and bodies of water when in flight. As the aircraft's altitude increases, keep an even further distance away from the aforementioned objects or obstacles.
4. DO NOT fly over 4.5 km (14,763 ft) above sea level.
5. The DJI Agras app will intelligently recommend the payload weight of the tank according to the current status and surroundings of the aircraft. When adding material to the tank, the max weight should not exceed the recommended value. Otherwise, the flight safety may be affected.
6. DO NOT operate any part of the aircraft indoors.

NOTICE

1. Aircraft and battery performance is subject to environmental factors such as air density and temperature.
   a. Be careful when flying 2 km (6,560 ft) or more above sea level as battery and aircraft performance may be reduced.
2. DO NOT use the aircraft near accidents, fire, explosions, floods, tsunamis, avalanches, landslides, earthquakes, dust, or sandstorms.
3. In low temperature environments (between 32° and 50° F (0° and 10° C)), make sure that the flight battery is fully charged and be sure to reduce the payload of the aircraft. Otherwise, it will affect the flight safety or a takeoff limit will occur.

Interference with Flight Controller and Communications

NOTICE

1. Fly in open areas. Tall buildings, steel structures, mountains, rocks, or forests may affect the accuracy of the on-board compass and block both GNSS and remote control signals.
2. Avoid using wireless devices that use the same frequency bands as the remote controller.
3. When using with multiple aircraft, including T30, T10 and other aircraft, make sure that the distance between each aircraft is more than 10 m to avoid interference.
4. The sensitivity of the radar module may be reduced when operating several aircraft within a short distance. Operate with caution.
5. To avoid interference between operations, do not operate more than three groups within a 50 m radius when using the Multi-Aircraft Control function.
6. Be alert when flying near areas with magnetic or radio interference. These include, but are not limited to, high voltage lines, large scale power transmission stations or mobile base stations, and broadcasting towers. Failing to do so may compromise the transmission quality of this product or cause transmission errors which may affect flight orientation and location accuracy. The aircraft may behave abnormally or go out of control in areas with too much interference.
7. If the RTK dongle is used for field planning, the module should be disconnected from the remote controller after planning is completed. Otherwise, it will affect the communication performance of the remote controller.

 © 2021 DJI All Rights Reserved.

Operating the Aircraft Responsibly

⚠ WARNING

To avoid component malfunction, serious injury, and property damage, observe the following rules:

1. **Make sure you are not under the influence of alcohol, drugs, or anesthesia, or suffering from dizziness, fatigue, nausea, or any other conditions, whether physical or mental, that could impair your ability to operate the aircraft safely.**
2. **DO NOT stop the motors mid-flight unless in an emergency situation where doing so will reduce the risk of damage or injury.**
3. **Upon landing, power off the aircraft, and then power off the remote controller.**
4. **DO NOT drop, launch, fire, or otherwise project any dangerous payloads on or at any buildings, persons, or animals, or which could cause personal injury or property damage.**

NOTICE

1. Make sure you have been sufficiently trained and have contingency plans for emergency situations or for when accidents occur.
2. Make sure you have a flight plan and DO NOT fly the aircraft recklessly.
3. DO NOT use this product for any illegal or inappropriate purpose such as spying, military operations, or unauthorized investigations.
4. DO NOT use this product to defame, abuse, harass, stalk, threaten, or otherwise violate the legal rights of others, such as the right of privacy and publicity.
5. DO NOT trespass onto private property of others.

Flight Modes, Operation Modes, Functions, and Warnings

Flight Modes

NOTICE

P-mode (Positioning): The aircraft utilizes GNSS or the RTK module for positioning. When the GNSS signal is strong, the aircraft uses GNSS for positioning. When the RTK module is enabled and the differential data transmission is strong, it provides centimeter-level positioning. It will revert to A-mode when the GNSS signal is weak or when the compass experiences interference.

The aircraft will fly in P-mode by default.

A-mode (Attitude): GNSS is not used for positioning and the aircraft can only maintain altitude using the barometer. The flight speed in A-mode depends on its surroundings such as the wind speed.

In A-mode, the aircraft cannot position itself and is easily affected by its surroundings, which may result in horizontal shifting. Use the remote controller to position the aircraft.

Maneuvering the aircraft in A-mode can be difficult. Avoid flying in confined spaces or in areas where the GNSS signal is weak. Otherwise, the aircraft will enter A-mode, leading to potential flight risks. Land the aircraft in a safe place as soon as possible.

Operation Modes

⚠ WARNING

To avoid component malfunction, serious injury, and property damage, observe the following rules:

1. **Make sure that you fully understand the aircraft's behavior under each operation mode before use.**
2. **Stay clear of obstacles near the operation route. Maintain line of sight to the aircraft and observe its status at all times.**
3. **Only operate in Route or A-B Route Operation mode when receiving a strong GNSS signal.**

Failsafe and Return to Home (RTH)

NOTICE

1. RTH will not work if there is a weak or no GNSS signal.
2. Tall buildings may adversely affect RTH. Therefore, it is important to set an appropriate failsafe altitude before each flight. Adjust the aircraft location, altitude, and speed while returning home to avoid obstacles when there is a strong remote controller signal.
3. Make sure to fly the aircraft within the transmission range of the remote controller.
4. Only use RTH in emergency cases, as they may be affected by the weather, the environment, or any nearby magnetic fields.
5. If there is an obstacle within 20 m of the aircraft, the aircraft decelerates and then stops and hovers. The aircraft will exit RTH and wait for further commands.
6. If RTH is triggered during Route operations, the aircraft can plan a flight path for RTH to circumvent the obstacles added when planning a field.

Low Battery

NOTICE

1. When the critical battery level warning is activated and the aircraft is descending automatically, push the throttle up to maintain the aircraft's altitude and navigate it to a more appropriate location for landing.
2. When battery warnings are triggered, promptly bring the aircraft back to the Home Point or land to avoid losing power during flight and causing damage to the aircraft, property, animals, or people.

Empty Tank

NOTICE

1. A prompt appears in the DJI Agras app and the aircraft hovers in place when the spray tank is empty. In Route, A-B Route, and Manual Plus Operation modes, the aircraft can also be set to ascend or Return to Home instead of hovering. Refer to the user manual for more information on operation modes

Compliance with Regulations & Flight Limits

Regulations

⚠ WARNING

To avoid non-compliant behavior, serious injury, and property damage, observe the following rules:

1. **DO NOT modify the aircraft or use the aircraft for purposes other than for agriculture.**
2. **DO NOT operate in the vicinity of manned aircraft, regardless of altitude. If necessary, land immediately.**
3. **DO NOT fly the aircraft in areas where the large events are being held, including but not limited to sporting events and concerts.**
4. **DO NOT fly the aircraft in areas prohibited by local laws.**
5. **Remain well clear of and DO NOT interfere with manned aircraft operations. Be aware of and avoid other aircraft and obstacles at all times.**

CAUTION

To avoid non-compliant behavior, serious injury, and property damage, observe the following rules:

1. DO NOT fly the aircraft near or inside restricted zones specified by local laws and regulations. Restricted zones include, but are not limited to, airports, borders between two sovereign countries or regions, major cities, and areas where temporary events or activities are being held. Note that restricted zones are continuously updated.

© 2021 DJI All Rights Reserved.

2. DO NOT fly the aircraft above the authorized altitude.
3. Make sure to keep your aircraft within VLOS, and use an observer to assist if needed.
4. DO NOT use the aircraft to carry illegal or dangerous payloads.

NOTICE

1. Make sure you understand the nature of your flight operation (such as for recreation, for public use, or for commercial use) and have obtained corresponding approval and clearance from the related government agencies before flight. Consult with your local regulators for comprehensive definitions and specific requirements. Visit http://www.dji.com for the most current instructions and warnings and https://www.dji.com/flysafe for more information about flight safety and compliance. Note that remote controlled aircraft may be banned from conducting commercial activities in certain countries and regions. Check and follow all local laws and ordinances before flying as those rules may differ from those stated here.
2. DO NOT fly around sensitive infrastructure or property such as power stations, water treatment facilities, correctional facilities, heavily traveled roadways, government facilities, and military zones.

Flight Limits

NOTICE

DJI stresses safety during flight, and has therefore developed various aids to help users comply with local rules and regulations while flying. We strongly recommend that you update the firmware to the latest version to ensure the following features are fully updated:

GEO Zones

1. All GEO zones are listed on the DJI official website at http://www.dji.com/flysafe. GEO zones are divided into different categories and include, but are not limited to, locations such as airports, flying fields where manned aircraft operate at low altitudes, borders between two sovereign countries or regions, sensitive locations such as power plants, and areas where major events are being held.
2. Flight restrictions vary by zone. Depending on the restrictions in a particular zone, warnings may appear in the DJI Agras app, takeoff may be forbidden, the flight altitude may be limited, or the aircraft may take action automatically such as landing automatically.
3. Functions related to flying actions will be affected to some extent when the aircraft is near or inside a GEO zone. When near or inside a GEO zone, the aircraft may slow down, it may not be possible to create a flight task, or a flight task in progress may be interrupted. Note that the effects are not limited to the above only.

Altitude Limit

1. Fly no higher than 100 m (328 ft) above ground level and stay away from any surrounding obstacles.

Distance Limit

1. The maximum flight distance is 1 km (0.62 mi) by default. Note that the battery level may not be enough for the aircraft to return to the Home Point if the aircraft is too far away. Make sure to fly with caution.

Export Controls

Comply with Applicable Export Control Laws

You are advised that export, re-export, and transfer of the Products are subjected to Chinese export control law and other applicable export control laws and sanctions (hereafter collectively referred to as "Export Control Laws"). Prior to your use, sale, transfer, rental, or other conduct related to the Products, unless permitted by the Export Control Laws or with the license issued by competent authorities, you shall in particular check and guarantee by appropriate measures that:

1. There will be no infringement of an embargo imposed by the Export Control Laws;
2. The Products will not be provided to the entities, persons, and organizations listed in all applicable sanctioned party lists;
3. The Products are not intended for use in connection with armaments, nuclear, chemical or biological weapons, or missile technology applications.

Export Compliance, Disclaimer & Indemnity

You acknowledge it is your responsibility to comply with Chinese export control law and any other applicable export control laws. You shall solely be responsible for the legal responsibility if any of your use, sale, transfer, rental or other conduct related to the Products fail to comply with the applicable export control laws. DJI shall, in no circumstances, be responsible for your violation of any applicable export control laws. Furthermore, you shall indemnify, defend, and hold harmless DJI, its affiliates, directors, officers, employees, agents, and representatives, from and against any and all claims, demands, suits, causes of action, expenses (including reasonable attorneys' fee), damages, losses, or liabilities of any nature whatsoever, arising from, or allegedly arising from, or related to, your failure to comply with applicable export control laws.

This content is subject to change without prior notice.

Download the latest version from
http://www.dji.com/t30

AGRAS and ⓓ are trademarks of DJI.
Copyright © 2021 DJI All Rights Reserved.

 © 2021 DJI All Rights Reserved