Leonardo S.p.A.
Via Giovanni Agusta, 520
21017 Cascina Costa di Samarate (VA) Italy
Tel.: +39 0331 229111 - Fax: +39 0331 229605/222595

AgustaWestland Products

SERVICE BULLETIN

EMERGENCY ALERT

N° **169-148**

DATE: May 29, 2019

REV. : C - April 6, 2020

TITLE

ATA 64 - TAIL ROTOR FLIGHT CONTROL IMPROVED PERIODICAL INSPECTION

REVISION LOG

Revision C of this Service Bulletin cancels and supersedes all the previous Revisions.

Revision A is issued to:

- Update the "Compliance" section clarifying the note relevant to accomplishment of Part VI;
- Update cross-reference in Part V step 4;
- Provide instruction to remove the castellated nut in place of loosen it while performing the replacement of the TR duplex bearing;
- Add closure action in case of findings after accomplishment with Part VI step 3;
- Add cleaning instruction of the TR duplex bearing area in Part V before installation of the spider plug
- Add details to cleaning procedure of spacer control rod surface with aliphatic naphtha
- Add note for accessibility to inspection Area in Part I.
- In case of no-findings after the inspections, it is not required anymore to send feedback to LHD.
- Add HUMS data download in case TRA HUMS accelerometer has been already installed to helicopter.

- Update the reference to Annex A - UTC Microtecnica Service Bulletin 67-0006 Issue 1.

Revision B is issued in order to introduce the following changes:

- Change effectivity for Part I from “All AW 169 helicopters” to “All AW 169 helicopters equipped with TRA P/N 6F6730V00331”;
- Remove Annex A and all the references to the subject document, as all the relevant information is now enclosed in applicable AMP Data Modules.

Revision C is issued in order to introduce the following changes:

- Insert a new note in Part II, IV, V and VI that completes control rod nut installation instruction when reinstalling spider and slider assembly.
- Insert an additional step in Part II to further clarify the installation procedure.

Revision bars in the margins identify changes.

1. PLANNING INFORMATION

A. EFFECTIVITY

Part I: All AW169 helicopters equipped with TRA P/N 6F6730V00331.

Part II: All AW169 helicopters.

Part III: All AW169 helicopters.

Part IV: All AW169 helicopters.

Part V: All AW169 helicopters.

Part VI: All AW169 helicopters.

B. COMPLIANCE

Part I:

Within 10 FH from last application of Part I of SB 169-135 or from the issue of this Service Bulletin, whichever occurs first. Then repeat the inspection every 10 FH.

NOTE

Every time it is required to perform Part II, accomplishment of Part I, Part IV and Part V on the same maintenance downtime, must be performed as a prerequisite. If Part III is required in the same maintenance downtime, it shall be performed lastly.

Part II:

Within 50 FH from last application of Part II of SB 169-135 or from the issue of this Service Bulletin, whichever occurs first. Then repeat the inspection every 50 FH.

Part III:

Within 20 FH from last application of Part III of SB 169-135 or from the issue of this Service Bulletin, whichever occurs first, then repeat the installation every 20 FH.

Part IV:

Within 10 FH from last application Part IV of SB 169-135 or from the issue of this Service Bulletin, whichever occurs first. Then repeat the inspection every 10 FH.

NOTE

Perform as a prerequisite Part I and Part IV.

If Part III is required in the same maintenance downtime, it shall be performed lastly.

Part V:

Within 10 FH from last application of Part I of SB 169-135 or from the issue of this Service Bulletin, whichever occurs first. Then repeat the inspection every 10 FH.

NOTE

- After the first accomplishment of Part VI repeat Part VI phased with Part II, not exceeding 200FH from the first application of the Part VI. Then repeat every 200FH.
- Perform in sequence Part I, Part IV, Part V as a prerequisite.
- If Part II is required in the same maintenance downtime, it shall be performed after Part V and before Part VI.
- If Part III is required in the same maintenance downtime, it shall be performed after Part VI.

Part VI:

Within 10 FH from last application of Part I of SB 169-135 or from the issue of this Service Bulletin, whichever occurs first. Then repeat the inspection every 200 FH.

C. CONCURRENT REQUIREMENTS

This SB supersedes and replaces the SB 169-135.

D. REASON

This Service Bulletin is issued in order to require the periodical inspection of the slippage marking of the back-end castellated nut of the TR servo-actuator and the periodical detailed inspection of the TR duplex bearing.

E. DESCRIPTION

Following additional tests and the completion of the initial phase of the in service monitoring carried out on the AW169 and AW189 fleet, it has been confirmed that the introduction of a temperature monitoring represents an effective independent measure to confirm the health of the TR bearing. In addition a refinement of the current inspection schedule is required with this SB along with the introduction of an additional instruction for duplex bearing roughness check.

This Service Bulletin provides the instructions for the above together with the transition to the new inspection regime.

In details Part I of this Service Bulletin provides the periodical detailed inspection of the slippage marking of the castellated nut installed on the back end of the TRA.

Part II partly retains the requirement of the Part II of the SB 169-135 defining the required detailed inspection requirement of TR duplex bearing.

Part III provides the instructions to install a dedicated thermal strip in the area of the TR duplex bearing.

Part IV provides the instructions to recursively check the thermal strip.

Part V requires the verification of metallic particle presence in the grease that could be found on the visible part of the duplex bearing. This check was already present in the Part II of the SB 169-135 and it is now confirmed with a tighter compliance.

Part VI prescribes an additional roughness check of the duplex bearing to be performed after removal of the spider assembly.

Incorrect installation of the TR servo-actuator back-end nut or seizure of the TR duplex bearing may lead to loss of Tail Rotor control which, depending on the flight condition, could lead to loss of control of the aircraft.

Feedback on the compliance to this Service Bulletin is required.

Revision A of this Service Bulletin allows the simplification of Part I inspection and reduce the amount of feedback required after “no-findings” inspections.

F. APPROVAL

The technical content of this Service Bulletin is approved under the authority of DOA nr. EASA.21.J.005. For helicopters registered under other Aviation Authorities, before applying the Service Bulletin, applicable Aviation Authority approval must be checked within Leonardo Helicopters customer portal.

E.A.S.A. states mandatory compliance with inspections, modifications or technical directives and related time of compliance by means of relevant Airworthiness Directives.

If an aircraft listed in the effectivity embodies a modification or repair not LHD certified and affecting the content of this Service Bulletin, it is responsibility of the Owner/Operator to obtain a formal approval by Aviation Authority having jurisdiction on the aircraft, for any adaptation necessary before incorporation of the present Service Bulletin.

G. MANPOWER

To comply with this Service Bulletin the following MMH are deemed necessary:

Part I: approximately one (0.5);

Part II: approximately three (3);

Part III: approximately half (0.5);

Part IV: approximately one (1);

Part V: approximately one (0.5);

Part VI: approximately three (3);

MMH are based on hands-on time and can change with personnel and facilities available.

H. WEIGHT AND BALANCE

N.A.

I. REFERENCES

1) PUBLICATIONS

DATA MODULE		DESCRIPTION	PART
DM01	69-A-00-20-00-00A-120A-A	Helicopter on ground for a safe maintenance.	I, II, III, IV, V, VI
DM02	69-A-06-40-00-00A-010A-A	Access door provision	I, II
DM03	69-A-64-31-01-00A-520A-A	Pitch link - Remove procedure	II
DM04	69-A-64-21-05-00A-520A-A	Lightning conductor jumper – Remove procedure	II
DM05	69-A-64-31-03-00A-520A-A	Spider plug - Remove procedure	II, III, IV, V, VI
DM06	69-A-64-31-03-00A-720A-A	Spider plug - Install procedure	II, III, IV, V, VI
DM07	69-A-64-31-02-00A-520A-A	Scissors group – Remove procedure	II
DM08	69-A-64-31-07-00A-520A-A	Boot - Remove procedure	II
DM09	69-A-64-31-04-00A-520A-A	Sliding control assy – Remove procedure	II, VI
DM10	69-A-64-31-04-00A-720A-A	Sliding control assy – Install procedure	II, VI
DM11	69-A-64-31-05-00A-520A-B	Duplex bearing - Remove procedure	II, IV, V, VI
DM12	69-A-64-31-05-00A-720A-B	Duplex bearing - Install procedure	II, IV, V, VI

2) ACRONYMS

SB	Service Bulletin
DM	Data Module
DOA	Design Organization Approval
EASA	European Aviation Safety Agency
LHD	Leonardo Spa Helicopters

MMH	Maintenance Man Hours
SB	Service Bulletin
FH	Flight Hours
TR	Tail Rotor
TRA	Tail Rotor Actuator

3) ANNEX

N.A.

J. PUBLICATIONS AFFECTED

N.A.

K. SOFTWARE ACCOMPLISHMENT SUMMARY

N.A.

2. MATERIAL INFORMATION

A. REQUIRED MATERIALS

1) PARTS

Refer to AW169 IPD for the spares materials required to comply with the AMP DMs referenced in the accomplishment instructions.

2) CONSUMABLES

The following consumable materials, or equivalent, are necessary to accomplish this Service Bulletin:

#	Spec./LHD code number	DESCRIPTION	Q.TY	NOTE	PART
1	Thermax 8 Level strip indicator code No.26805	Thermal strip	AR	(1)(2)(3)	III,IV
2	TT-N-95-B / Code No. 531055030	Aliphatic Naphtha (C059)	AR	(1)	III,IV

Refer to AW169 AMDI for the consumables required to comply with the AMP DMs referenced in the accomplishment instructions.

3) LOGISTIC MATRIX

N.A.

NOTE

(1) Item to be furnished as local supply.

(2) Thermal strip Thermax 5 Level clock style indicator code No.26004 may be used as a valid alternative.

(3) The use of further alternative strip is allowed provided that it complies with the following requirements:

- Irreversible temperature indication.
- Self-Adhesive.
- Temperature Range shall be included within 100°C – 160°C provided that it shows a discrete level at 121±2°C.
- Overall measurement accuracy: ±2°C.
- The maximum allowed length to prevent overlap is 80 mm.

In case any clarification is needed, contact the Product Support Engineering (pse_aw169.mbx.aw@leonardocompany.com).

B. SPECIAL TOOLS

Refer to ITEP for the special tools required to comply with the AMP DMs referenced in the accomplishment instructions.

C. INDUSTRY SUPPORT INFORMATION

Owners/Operators who comply with the instructions of this Service Bulletin no later than the applicable date in the “Compliance” section will be eligible to receive REQUIRED MATERIALS on free of charge basis, except for Consumable Materials and Special Tools.

NOTE: Customers who fail to comply with the instructions in this Service Bulletin before the compliance date are not eligible for the aforementioned special policy.

Please Issue relevant MMIR form to your Warranty Administration Dpt.

NOTE: WRM will include RETURN MATERIAL AUTHORIZATION (RMA) number; the unit disembarked from the aircraft has to be returned to LHD within thirty (30) calendar days after the shipment of the replacement part. In case of missing return within thirty (30) calendar days, Customer will be invoiced for the price of the replacement part.

3. ACCOMPLISHMENT INSTRUCTIONS

GENERAL NOTES

a) Place an identification tag on all components that are re-usable, including the attaching hardware that has been removed to gain access to the modification area and adequately protect them until their later re-use.

PART I

1. In accordance with AMP DM 69-A-00-20-00-00A-120A-A, prepare the helicopter on ground for a safe maintenance. Disconnect the battery, all electrical power sources and/or the external power supply.

NOTE

Removal of access panels 470AT and 470BT can be avoided if visual access to the inspection area is available by other means. A suitable borescope can be used for this purpose.

2. In accordance with AMP DM 69-A-06-40-00-00A-010A-A remove the access panels 470AT and 470BT.
3. Take a picture of the back-end area of the TRA clearly showing the slippage mark, and keep a record in a local archive to be made available if required.
4. With reference to Figure 3, check the slippage mark on the castellated nut for absence of evidence of rotation between the parts. Record the result on Table I (refer to Figure 7).
5. If any evidence of rotation is found, contact the Product Support Engineering (pse_aw169.mbx.aw@leonardocompany.com), wait for further instructions before to perform the following checks:
   - 5.1 Perform Part II of this SB;
   - 5.2 Perform Part V of this SB;
   - 5.3 Send the picture taken at step 3 to Product Support Engineering (pse_aw169.mbx.aw@leonardocompany.com).
   - 5.4 If the helicopter is already compliant with the SB 169-140, perform HUMS data download from AMMC to DTD. Upload the HUMS data to Heliwise.
6. If no evidence of rotation is found in step 4, return the helicopter to a ready to flight condition and record for compliance with Part I of this Service Bulletin on the helicopter logbook.

7. Send the attached compliance form and the compiled Table I to the following mail box:

   pse_aw169.mbx.aw@leonardocompany.com

   As an alternative, gain access to My Communications section on Leonardo WebPortal and compile the “Service Bulletin Application Communication”.

PART II

1. In accordance with AMP DM 69-A-00-20-00-00A-120A-A, prepare the helicopter on ground for a safe maintenance. Disconnect the battery, all electrical power sources and/or the external power supply.

NOTE

If not damaged, the O-ring removed in the following step can be retained for later reinstallation.

2. In accordance with AMP DM 69-A-64-31-03-00A-520A-A, remove the spider plug.
3. In accordance with AMP DM 69-A-64-31-01-00A-520A-A, remove all the pitch links from the TR.
4. In accordance with applicable steps of AMP DM 69-A-64-31-02-00A-520A-A, disconnect the upper half scissors from the spider.
5. In accordance with applicable steps of AMP DM 69-A-64-31-07-00A-520A-A, disconnect and lower the boot from the spider.
6. In accordance with AMP DM 69-A-64-21-05-00A-520A-A, disconnect the TR lightning conductor jumper.
7. Perform the inspection of the TR duplex bearing in accordance with the following procedure:

   7.1 Inspect the visible part of the TR duplex bearing (including the seals) for absence of wear, damages and security of attachment. Record the results on Table II (refer to Figure 8).

   7.2 Check for absence of axial play when trying to move the spider along the control rod axis. Record the result on Table II (refer to Figure 8).

NOTE

With reference to Figure 1 and Figure 2 View B and Detail C, apply a 25 ± 2.5 N upward force on the squared rod end by means of a dynamometer while performing the instructions reported in steps from 7.3 to 7.7. It is allowed to apply the force either pushing or pulling the rod end with the dynamometer.

   7.3 Perform at least three (3) complete and continuous revolutions of the spider both in clockwise and in counterclockwise directions and verify that the spider has a free and easy rotation. Record the result on Table II (refer to Figure 8).

   7.4 Put one arm of the spider along the vertical position; locate a dynamometer gauge on the spider arm hole (pitch link upper bolt location). Hold the gauge perpendicular to the spider arm surface. Gently push rightward the device until a

slight rotation of the spider occurs (see Figures 1 and 2 for further details and dynamometer positioning). Record the force measured on Table II (refer to Figure 8).

7.5 Repeat step 7.4 for the opposite spider rotation on the same arm, pushing leftward the dynamometer gauge from the vertical position of the spider arm. Record the force measured on Table II (refer to Figure 8).

7.6 Repeat steps 7.4 and 7.5 for all the other two spider arms.

7.7 The force detected by dynamometer on steps 7.4 thru 7.6 shall be measured within 1.6 N and 8.8 N.

8. If none of the checks performed in step 7 fails proceed as follows, otherwise skip to step 9.

NOTE

Removal of access panels 470AT and 470BT can be avoided if visual access to the inspection area is available by other means. A suitable borescope can be used for this purpose.

8.1 In accordance with AMP DM 69-A-06-40-00-00A-010A-A remove the access panels 470AT and 470BT.

8.2 With reference to Figure 3, check the slippage mark on the castellated nut for absence of evidence of rotation between the parts. If any evidence of rotation is found, immediately contact the PSE (pse_aw169.mbx.aw@leonardocompany.com) and wait for further instructions.

8.3 If helicopter is already compliant with the SB 169-140, perform HUMS data download from AMMC to DTD. Upload the HUMS data to Heliwise.

8.4 Skip to step 13.

9. If one of the checks performed from step 7.1 to 7.2 fails skip to step 11, otherwise proceed with the following step 10.

10. If one of the checks performed from step 7.3 to step 7.7 fails proceed as follows:

10.1 Perform the cleaning procedure of the sliding control assy in accordance with the following procedure:

10.1.1 In accordance with AMP DM 69-A-06-40-00-00A-010A-A remove the access panels 470AT and 470BT.

CAUTION

Pay attention to prevent rod rotation, when screwing / un-screwing the castellated nut, holding the rod square end.

10.1.2 In accordance with AMP DM 69-A-64-31-04-00A-520A-A, remove the sliding control assy.

10.1.3 Clean the external surface of the sliding control assy by means of soft lint-free cloth.

10.1.4 Clean the accessible internal surface of the slider bushing by means of soft lint-free cloth.

CAUTION

Pay attention to prevent rod rotation, when screwing / un-screwing the castellated nut, holding the rod square end.

NOTE

In case during the installation of control rod nut, after several attempts with different nuts, the minimum required breakaway torque (as required by AMP DM 69-A-64-31-04-00A-720A-A) is not reached, please contact the Product Support Engineering (pse_aw169.mbx.aw@leonardocompany.com) to receive dedicated instructions.

10.1.5 In accordance with AMP DM 69-A-64-31-04-00A-720A-A, reinstall the sliding control assy.

10.1.6 With reference to Figure 3, restore the slippage marking on the castellated nut from the hinge bracket element to the rod.

10.2 Repeat steps from 7.2 to 7.7 to verify the absence of axial play of TR duplex bearing and to perform again the roughness and breakaway force checks of TR duplex bearing.

10.3 If any of the checks performed in step 10.2 fails proceed with the following step 11, otherwise skip to step 13.

11. Contact immediately the Product Support Engineering (pse_aw169.mbx.aw@leonardocompany.com) to receive further instruction before performing the replacement of the TR duplex bearing in accordance with the following procedure:

11.1 If helicopter is already equipped compliant with the SB 169-140, perform HUMS data download from AMMC to DTD. Upload the HUMS data to Heliwise.

CAUTION

Pay attention to prevent rod rotation, when screwing / un-screwing the castellated nut, holding the rod square

end.

NOTE

Before removal of the TR duplex bearing, take note of its installation orientation marking "OUT" on the outboard visible face.After removal mark "IN" on the inboard opposite face of the TR duplex bearing. Use an indelible pen.

11.2 In accordance with AMP DM 69-A-64-31-05-00A-520A-B, remove the TR duplex bearing.

11.3 Collect the grease leaked from the TR duplex bearing "IN" marked side in a container different from the one used before.

11.4 Take a picture of both faces of the removed TR duplex bearing and send them to PSE (pse_aw169.mbx.aw@leonardocompany.com) before returning the bearing.

11.5 Clean by means of a soft lint-free cloth the housing of the TR duplex bearing, the rod visible part and the internal side of the spider plug.

CAUTION

Pay attention to prevent rod rotation, when screwing / un-screwing the castellated nut, holding the rod square end.

NOTE

In case during the installation of control rod nut, after several attempts with different nuts, the minimum required breakaway torque (as required by AMP DM 69-A-64-31-04-00A-720A-A) is not reached, please contact the Product Support Engineering (pse_aw169.mbx.aw@leonardocompany.com) to receive dedicated instructions..

11.6 In accordance with AMP DM 69-A-64-31-05-00A-720A-B, install a new TR duplex bearing.

11.7 With reference to Figure 3, restore the slippage marking on the castellated nut from the hinge bracket element to the rod.

12. In case replacement of the TR duplex bearing is required, please return immediately (within 2 days) the removed TR duplex bearing and the collecting containers of the grease to Leonardo Helicopters. Contact the Product Support Engineering (pse_aw169.mbx.aw@leonardocompany.com) to receive the proper instructions to return the removed component.

13. In accordance with AMP DM 69-A-64-31-01-00A-720A-A, restore the correct installation of TR pitch links.

NOTE

When performing the following step allow the sealant to cure for at least 2 hours before the next flight.

14. In accordance with AMP DM 69-A-64-31-03-00A-720A-A, install the spider plug.

NOTE

In case of any findings, report within 2 days the inspection results along with the available records of the previous checks.

15. Send the attached compliance form and the compiled Table II to the following mail box:

    pse_aw169.mbx.aw@leonardocompany.com

    As an alternative, gain access to My Communications section on Leonardo WebPortal and compile the “Service Bulletin Application Communication”.

16. Return the helicopter to a ready to flight condition and record for compliance with Part II of this Service Bulletin on the helicopter logbook.

PART III

1. In accordance with AMP DM 69-A-00-20-00-00A-120A-A, prepare the helicopter on ground for a safe maintenance. Disconnect the battery, all electrical power sources and/or the external power supply.
2. In accordance with AMP DM 69-A-64-31-03-00A-520A-A, remove the spider plug.
3. With reference to Figure 4, perform the installation of thermal strip Thermax 8 level strip No.26805 or equivalent as follows:

   3.1 Clean the spacer control rod P/N 4F6430A02551 surface with a soft lint-free cloth soaked with a small quantity of aliphatic naphtha. Then dry the surface with a clean cloth.

   3.2 With reference to Figure 5, if the selected thermal strip exceeds the height of 16 mm it shall be cut taking care not to remove the Celsius scale and not to damage the sensitive elements of the strip.

CAUTION

When installing the thermal strip pay attention to:

- avoid contact with bearing gaskets;
- ensure a good adhesion with the spacer control rod P/N 4F6430A02551;
- all temperature indicators of the thermal strip shall be visible.

CAUTION

If thermal strip trimming is required, confirm that the cut did not cause debonding of strip layers.

   3.3 With reference to Figure 4, with the help of a non metallic spatula, perform the installation of the thermal strip on the surface of the spacer control rod P/N 4F6430A02551.

NOTE

When performing the following step allow the sealant to cure for at least 2 hours before the next flight.

4. In accordance with AMP DM 69-A-64-31-03-00A-720A-A, install the spider plug.
5. Return the helicopter to a ready to flight condition and record for compliance with Part III of this Service Bulletin on the helicopter logbook.
6. Send the attached compliance form to the following mail box:

   pse_aw169.mbx.aw@leonardocompany.com

   As an alternative, gain access to My Communications section on Leonardo WebPortal and compile the “Service Bulletin Application Communication”.

PART IV

1. In accordance with AMP DM 69-A-00-20-00-00A-120A-A, prepare the helicopter on ground for a safe maintenance. Disconnect the battery, all electrical power sources and/or the external power supply.
2. In accordance with AMP DM 69-A-64-31-03-00A-520A-A, remove the spider plug.
3. With reference to Figure 4, check the thermal strip for good adhesion and readability and proceed as follows:
   - 3.1 If the thermal strip is properly installed proceed with step 4;
   - 3.2 If the strip is detached, partially detached or unreadable perform the TR duplex bearing inspection in accordance with accomplishment instructions from step 3 to step 15 of Part II of this SB;
   - 3.3 Replace the thermal strip in accordance with step 3 of Part III of this SB;
   - 3.4 Skip to step 6.

CAUTION

In case the selected thermal strip does not provide a discrete value equal to 121°C, select the lowest value comprised within the range 121±2°C.

4. With reference to Figure 4, check the temperature reached by the thermal strip installed on spacer control rod P/N 4F6430A02551. Make sure that the temperature has not reached a value equal to or above 121°C. Record the check result on Table III (refer to Figure 9).
5. If temperature has exceeded a value equal to or above 121°C, perform the following steps, otherwise skip to step 6:
   - 5.1 If the helicopter is already compliant with the SB 169-140, perform HUMS data download from AMMC to DTD. Upload the HUMS data to Heliwise.
   - 5.2 Contact immediately the Product Support Engineering (pse_aw169.mbx.aw@leonardocompany.com) to receive further instruction before thermal strip and duplex bearing removal and replacement.
   - 5.3 Perform from step 3 to step 15 of Part II of this SB.
   - 5.4 Perform from step 3 to step 9 of Part V of this SB.
   - 5.5 Remove the spacer control rod P/N 4F6430A02551, without removing the thermal strip.
   - 5.6 Take a picture of the thermal strip, installed on the removed spacer control rod P/N 4F6430A02551 and send it to PSE (pse_aw169.mbx.aw@leonardocompany.com).

CAUTION

Pay attention to prevent rod rotation, when screwing / un-screwing the castellated nut, holding the rod square end.

NOTE

Before removal of the TR duplex bearing, take note of its installation orientation marking "OUT" on the outboard visible face.

After removal mark "IN" on the inboard opposite face of the TR duplex bearing.

Use an indelible pen.

5.7 In accordance with AMP DM 69-A-64-31-05-00A-520A-B, remove the TR duplex bearing.

5.8 Collect the grease leaked from the TR duplex bearing "IN" marked side in a container different from the one used before.

5.9 Take a picture of both faces of the removed TR duplex bearing and send them to PSE (pse_aw169.mbx.aw@leonardocompany.com) before returning the bearing.

5.10 Clean by means of a soft lint-free cloth the housing of the TR duplex bearing, the rod visible part and the internal side of the spider plug

CAUTION

Pay attention to prevent rod rotation, when screwing / un-screwing the castellated nut, holding the rod square end.

NOTE

In case during the installation of control rod nut, after several attempts with different nuts, the minimum required breakaway torque (as required by AMP DM 69-A-64-31-04-00A-720A-A) is not reached, please contact the Product Support Engineering (pse_aw169.mbx.aw@leonardocompany.com) to receive dedicated instructions..

5.11 In accordance with AMP DM 69-A-64-31-05-00A-720A-B, install a new TR duplex bearing.

5.12 In accordance with AMP DM 69-A-64-31-04-00A-720A-A, reinstall the sliding control assembly.

5.13 With reference to Figure 3, restore the slippage marking on the castellated nut

from the hinge bracket element to the rod.

5.14 In case replacement of the TR duplex bearing is required, please return immediately (within 2 days) the removed TR duplex bearing, the collecting containers of the grease and the thermal strip to Leonardo Helicopters. Contact the Product Support Engineering (pse_aw169.mbx.aw@leonardocompany.com) to receive the proper instructions to return the removed component.

5.15 Go to Step 6.

NOTE

When performing the following step allow the sealant to cure for at least 2 hours before the next flight.

6. In accordance with AMP DM 69-A-64-31-03-00A-720A-A, install the spider plug.
7. Return the helicopter to a ready to flight condition and record for compliance with Part IV of this Service Bulletin on the helicopter logbook.

NOTE

In case of any findings, report within 2 days the inspection results along with the available records of the previous checks.

8. Send the attached compliance form and the compiled Table III to the following mail box:

   pse_aw169.mbx.aw@leonardocompany.com

   As an alternative, gain access to My Communications section on Leonardo WebPortal and compile the “Service Bulletin Application Communication”.

PART V

1. In accordance with AMP DM 69-A-00-20-00-00A-120A-A, prepare the helicopter on ground for a safe maintenance. Disconnect the battery, all electrical power sources and/or the external power supply.

NOTE

If not damaged, the O-ring removed in the following step can be retained for later reinstallation.

2. In accordance with AMP DM 69-A-64-31-03-00A-520A-A, remove the spider plug.
3. Perform a detailed inspection of the TR duplex bearing in accordance with the following procedure:
   - 3.1 Check the visible part of the TR duplex bearing for particles absence.

CAUTION

Pay attention not to damage the thermal strip during the grease sampling from the bearing housing.

   - 3.2 Check the visible part of the TR duplex bearing and/or the spider plug for grease leakage and confirm absence of any particles by finger touch.
   - 3.3 Put a small quantity of grease using a small spatula in a transparent container and add a solvent (aliphatic naphtha). Then by using a magnet on the bottom out side of the container check for presence of magnetic particles.
   - 3.4 Record the result on Table IV (refer to Figure 10) and collect the grease leaked from the visible surface in a proper container.
4. If magnetic metallic and/or any other particles are found during accomplishment of step 3 proceed with the following step 5, otherwise skip to step 7.
5. Perform from step 3 to step 15 of Part II of this SB.
6. Contact immediately the Product Support Engineering (pse_aw169.mbx.aw@leonardocompany.com) to receive further instruction before performing the replacement of the TR duplex bearing in accordance with the following procedure:
   - 6.1 If helicopter is already compliant with the SB 169-140, perform HUMS data download from AMMC to DTD. Upload the HUMS data to Heliwise.

CAUTION

Pay attention to prevent rod rotation, when screwing / un-screwing the castellated nut, holding the rod square end.

NOTE

Before removal of the TR duplex bearing, take note of its installation orientation marking “OUT” on the outboard visible face.

After removal mark “IN” on the inboard opposite face of the TR duplex bearing.

Use an indelible pen.

6.2 In accordance with AMP DM 69-A-64-31-05-00A-520A-B, remove the TR duplex bearing.

6.3 Collect the grease leaked from the TR duplex bearing “IN” marked side in a container different from the one used before.

6.4 Take a picture of both faces of the removed TR duplex bearing and send them to PSE (pse_aw169.mbx.aw@leonardocompany.com) before returning the bearing.

6.5 Clean by means of a soft lint-free cloth the housing of the TR duplex bearing, the rod visible part and the internal side of the spider plug.

CAUTION

Pay attention to prevent rod rotation, when screwing / un-screwing the castellated nut, holding the rod square end.

NOTE

In case during the installation of control rod nut, after several attempts with different nuts, the minimum required breakaway torque (as required by AMP DM 69-A-64-31-04-00A-720A-A) is not reached, please contact the Product Support Engineering (pse_aw169.mbx.aw@leonardocompany.com) to receive dedicated instructions..

6.6 In accordance with AMP DM 69-A-64-31-05-00A-720A-B, install a new TR duplex bearing.

6.7 With reference to Figure 3, restore the slippage marking on the castellated nut from the hinge bracket element to the rod.

7. In case replacement of the TR duplex bearing is required, please return immediately (within 2 days) the removed TR duplex bearing and the collecting containers of the grease to Leonardo Helicopters. Contact the Product Support Engineering (pse_aw169.mbx.aw@leonardocompany.com) to receive the proper instructions to return the removed component.

8. Clean the visible surface of the TR duplex bearing by means of soft lint-free cloth.

NOTE

When performing the following step allow the sealant to cure for at least 2 hours before the next flight.

9. In accordance with AMP DM 69-A-64-31-03-00A-720A-A, install the spider plug.
10. Return the helicopter to a ready to flight condition and record for compliance with Part V of this Service Bulletin on the helicopter logbook.

NOTE

In case of any findings, report within 2 days the inspection results along with the available records of the previous checks.

11. Send the attached compliance form and the compiled Table IV to the following mail box:

    pse_aw169.mbx.aw@leonardocompany.com

    As an alternative, gain access to My Communications section on Leonardo WebPortal and compile the “Service Bulletin Application Communication”

PART VI

1. In accordance with AMP DM 69-A-00-20-00-00A-120A-A, prepare the helicopter on ground for a safe maintenance. Disconnect the battery, all electrical power sources and/or the external power supply.
2. In accordance with AMP DM 69-A-64-31-04-00A-520A-A, remove the sliding control assembly.
3. Inspect the visible part of the inboard side of the TR duplex bearing (including the seals) for absence of wear, damages and particles by looking inside the slider cylinder. Record the results on Table V (refer to Figure 11).
4. With reference to Figure 11 lock the slider of the sliding control assembly in a bench vice with padded jaws.
5. Examine the duplex bearing to find roughness in accordance with the following procedure:

NOTE

- To initiate rotation of the duplex bearing, a break-out force could be necessary. The break-out force is not an indication of roughness.
- Relative axial movement between the inner races is acceptable and shall not be considered as a finding.

5.1 Use your fingers to push down on the upper face of the inner race of the duplex bearing.

NOTE

Do not release pressure, continue to apply pressure with your fingers during the subsequent step.

5.2 With reference to Figure 6 section A-A Step 1, push the top inner race down and at the same time turn it to feel if there is roughness.

5.3 Put your finger into the duplex bearing until you can pull up the lower face of the inner race.

NOTE

Do not release pressure, continue to apply pressure with your finger during the subsequent step.

5.4 With reference to Figure 6 section A-A Step 2, pull the bottom inner race in the up direction and at the same time turn it to feel if there is roughness.

5.5 Repeat the Step 5.1 thru Step 5.4 at least one time to confirm the results.

5.6 Record the results of the previous steps on Table V (refer to Figure 11).

6. If any of the checks performed in the steps 3 and 5 fail, proceed with the following step, otherwise skip to step 8.
7. Contact immediately contact the Product Support Engineering (pse_aw169.mbx.aw@leonardocompany.com) to receive further instruction before performing the replacement of the TR duplex bearing in accordance with the following procedure:

   7.1 If helicopter is already compliant with the SB 169-140, perform HUMS data download from AMMC to DTD. Upload the HUMS data to Heliwise.

   NOTE

   Before removal of the TR duplex bearing, take note of its installation orientation marking "OUT" on the outboard visible face.
   After removal mark "IN" on the inboard opposite face of the TR duplex bearing.
   Use an indelible pen.

   7.2 In accordance with AMP DM 69-A-64-31-05-00A-520A-B, remove the TR duplex bearing.

   7.3 Collect the grease leaked from the TR duplex bearing "IN" marked side in a container different from the one used before.

   7.4 Take a picture of both faces of the removed TR duplex bearing and send them to PSE (pse_aw169.mbx.aw@leonardocompany.com) before returning the bearing.

   7.5 Clean by means of a soft lint-free cloth the housing of the TR duplex bearing, the rod visible part and the internal side of the spider plug.

   NOTE

   In case during the installation of control rod nut, after several attempts with different nuts, the minimum required breakaway torque (as required by AMP DM 69-A-64-31-04-00A-720A-A) is not reached, please contact the Product Support Engineering (pse_aw169.mbx.aw@leonardocompany.com) to receive dedicated instructions..

   7.6 In accordance with AMP DM 69-A-64-31-05-00A-720A-B, install a new TR duplex bearing. Proceed with step 8.

NOTE

In case during the installation of control rod nut, after several attempts with different nuts, the minimum required breakaway torque (as required by AMP DM 69-A-64-31-04-00A-720A-A) is not reached, please contact the Product Support Engineering (pse_aw169.mbx.aw@leonardocompany.com) to receive dedicated instructions..

8. In accordance with AMP DM 69-A-64-31-04-00A-720A-A, reinstall the sliding control assembly.
9. With reference to Figure 3, restore the slippage marking on the castellated nut from the hinge bracket element to the rod.
10. Return the helicopter to a ready to flight condition and record for compliance with Part VI of this Service Bulletin on the helicopter logbook.

NOTE

In case of any findings, report within 2 days the inspection results along with the available records of the previous checks.

11. In case replacement of the TR duplex bearing is required, please return immediately (within 2 days) the removed TR duplex bearing and the collecting containers of the grease to Leonardo Helicopters. Contact the Product Support Engineering (pse_aw169.mbx.aw@leonardocompany.com) to receive the proper instructions to return the removed component.
12. Send the attached compliance form and the compiled Table V to the following mail box:

    pse_aw169.mbx.aw@leonardocompany.com

    As an alternative, gain access to My Communications section on Leonardo WebPortal and compile the “Service Bulletin Application Communication”.

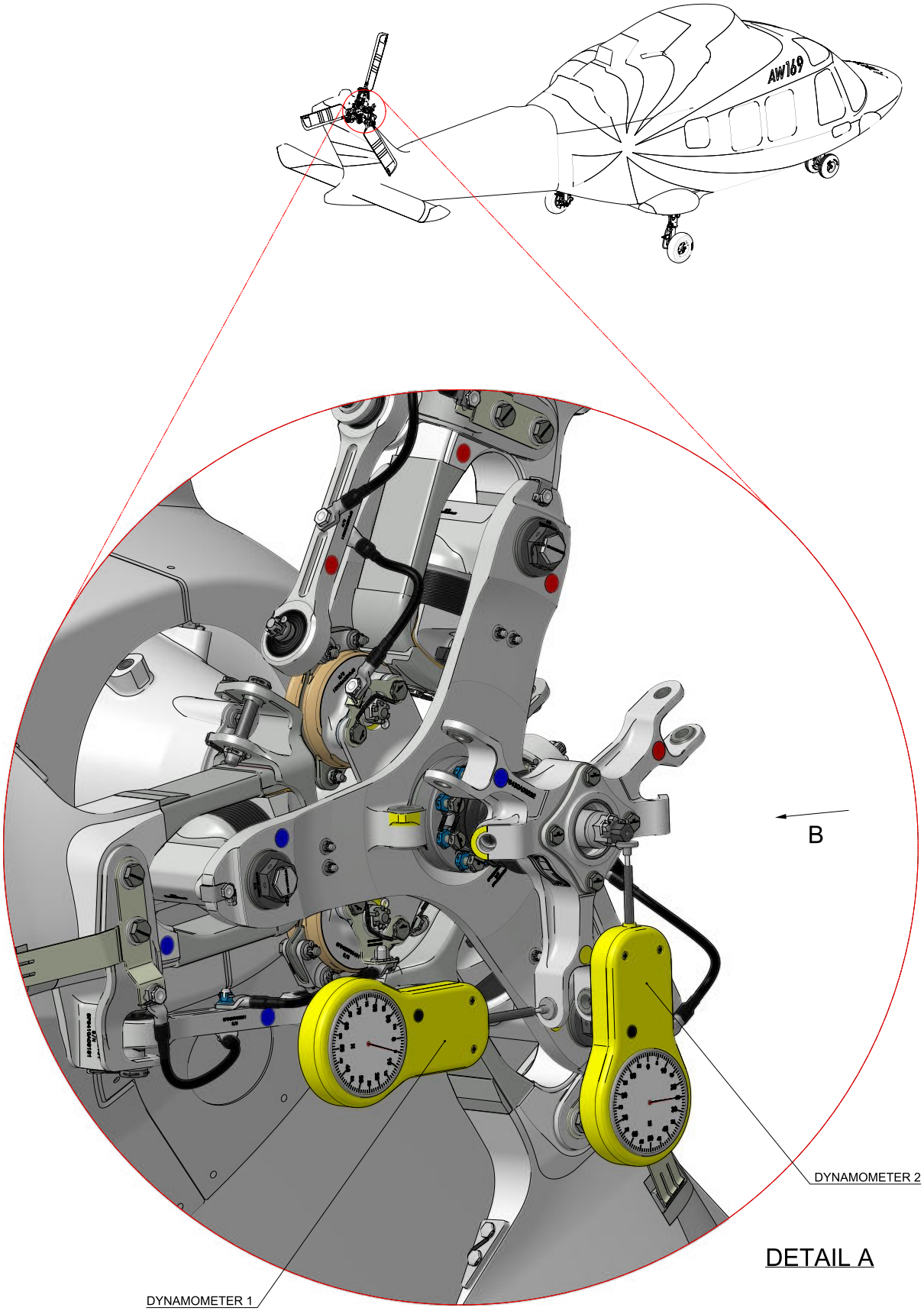

Figure 1

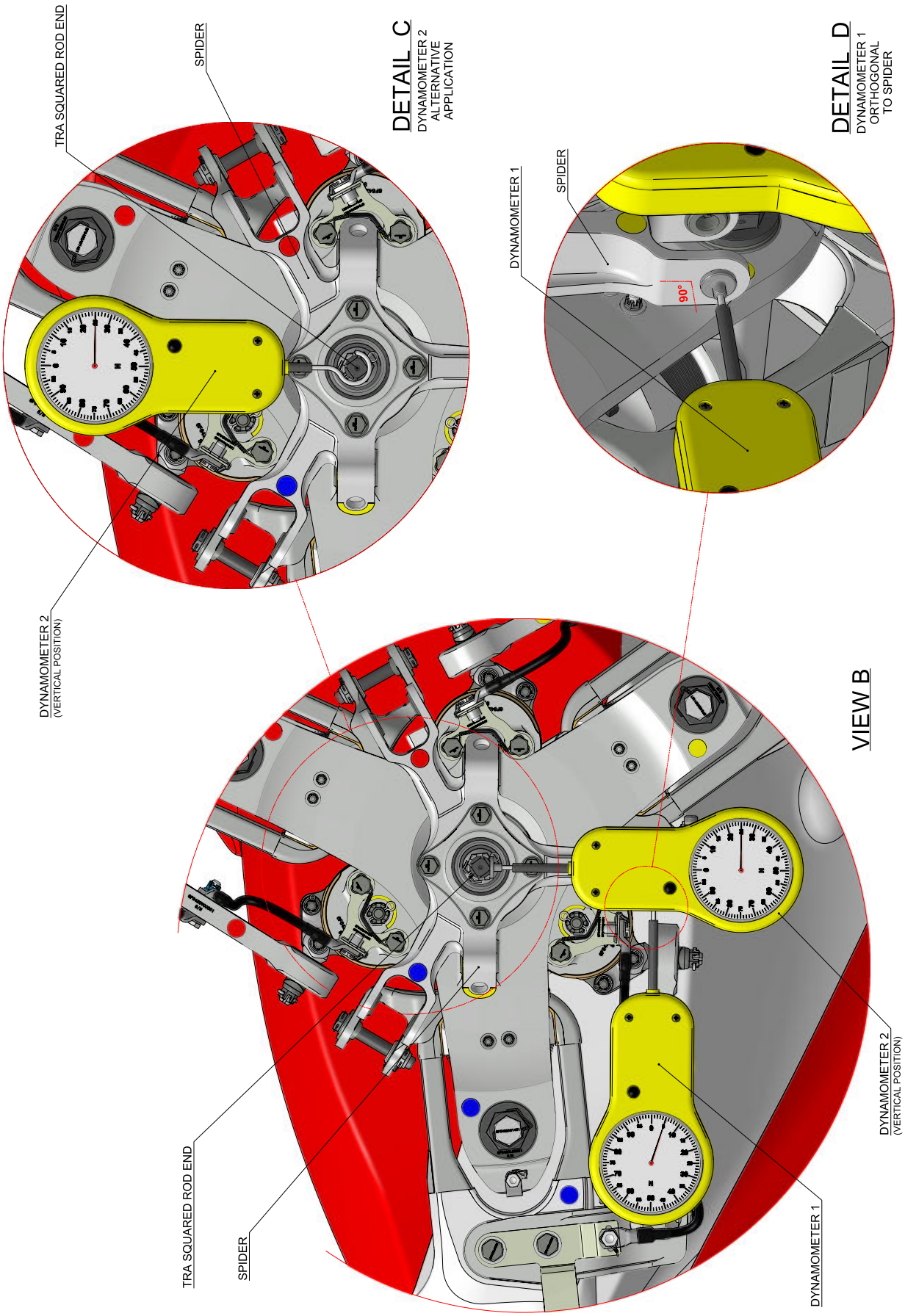
TRA SQUARED ROD END
SPIDER
DETAIL C
DYNAMOMETER 2
ALTERNATIVE
APPLICATION
DYNAMOMETER 2
(VERTICAL POSITION)
DYNAMOMETER 1
SPIDER
90°
DETAIL D
DYNAMOMETER 1
ORTHOGONAL
TO SPIDER
VIEW B
TRA SQUARED ROD END
SPIDER
DYNAMOMETER 1
DYNAMOMETER 2
(VERTICAL POSITION)

Figure 2

Figure 3

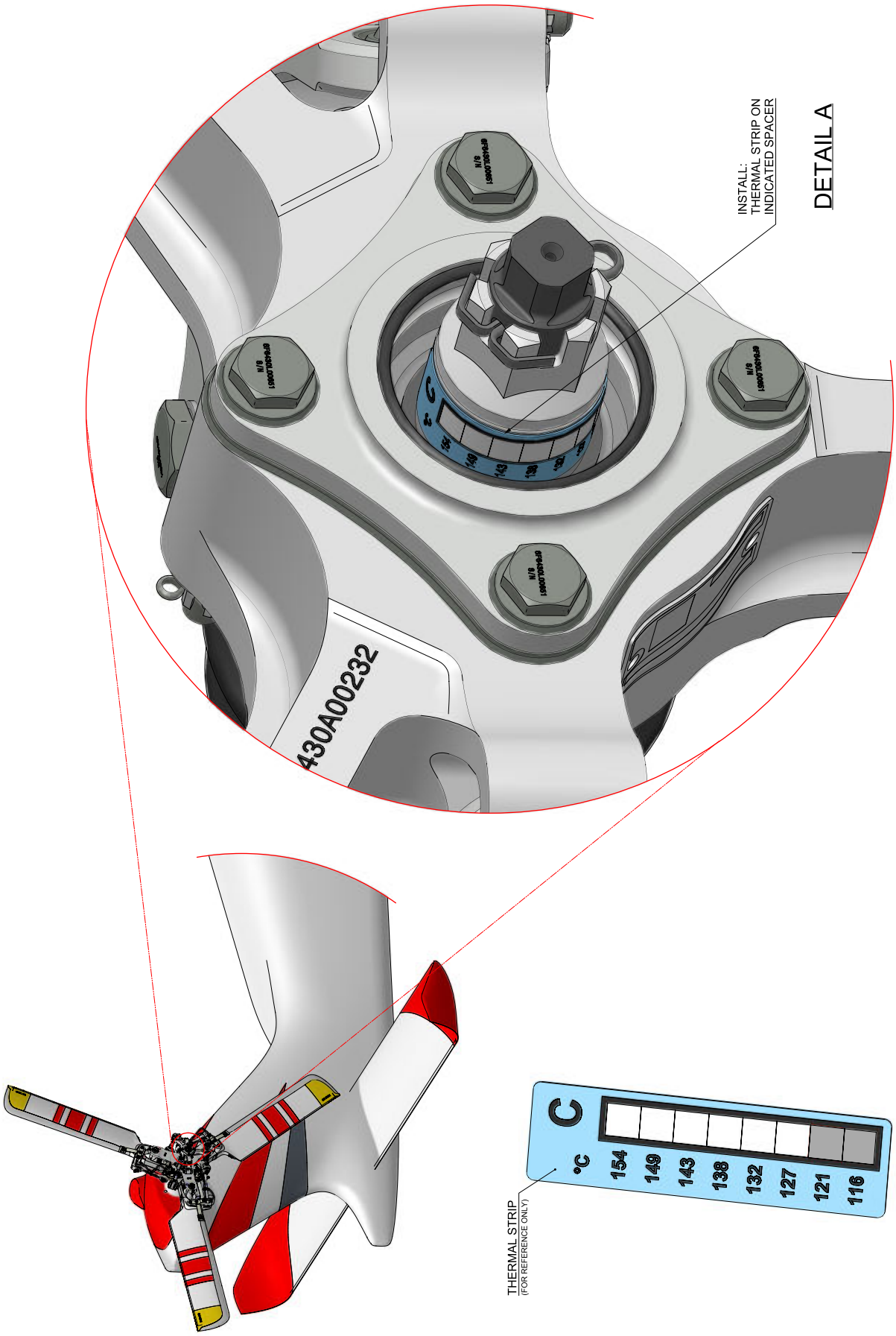
DETAIL A
INSTALL:
THERMAL STRIP ON
INDICATED SPACER
430A00232
THERMAL STRIP
(FOR REFERENCE ONLY)
°C
154
149
143
138
132
127
121
116

Figure 4

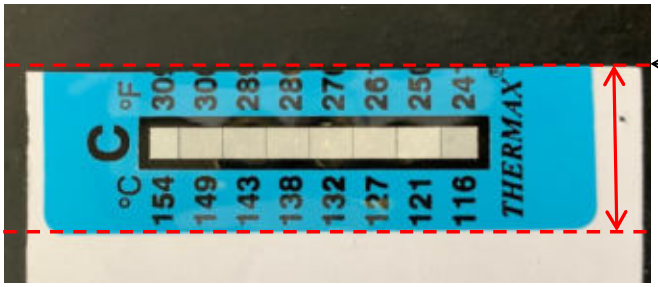

16mm

Cutting line. Pay attention to not cut the degree Celsius scale.

Limit cutting at the minimum required to obtain 16mm of height.

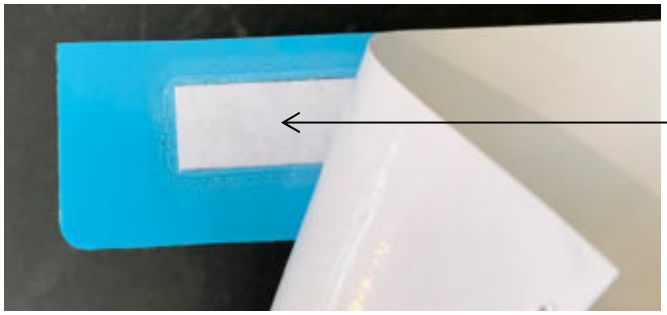

Pay attention to not damage or to expose to the environment the sensitive elements.

NOTE

Do not use a thermal strip if after having trimmed it, its sensitive element is exposed to air. See below an example of a badly cut strip.

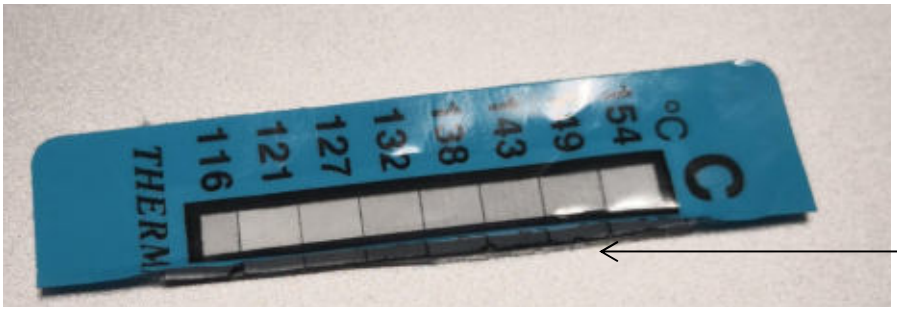

Thermal strip layers delamination.
NOT acceptable.

Figure 5

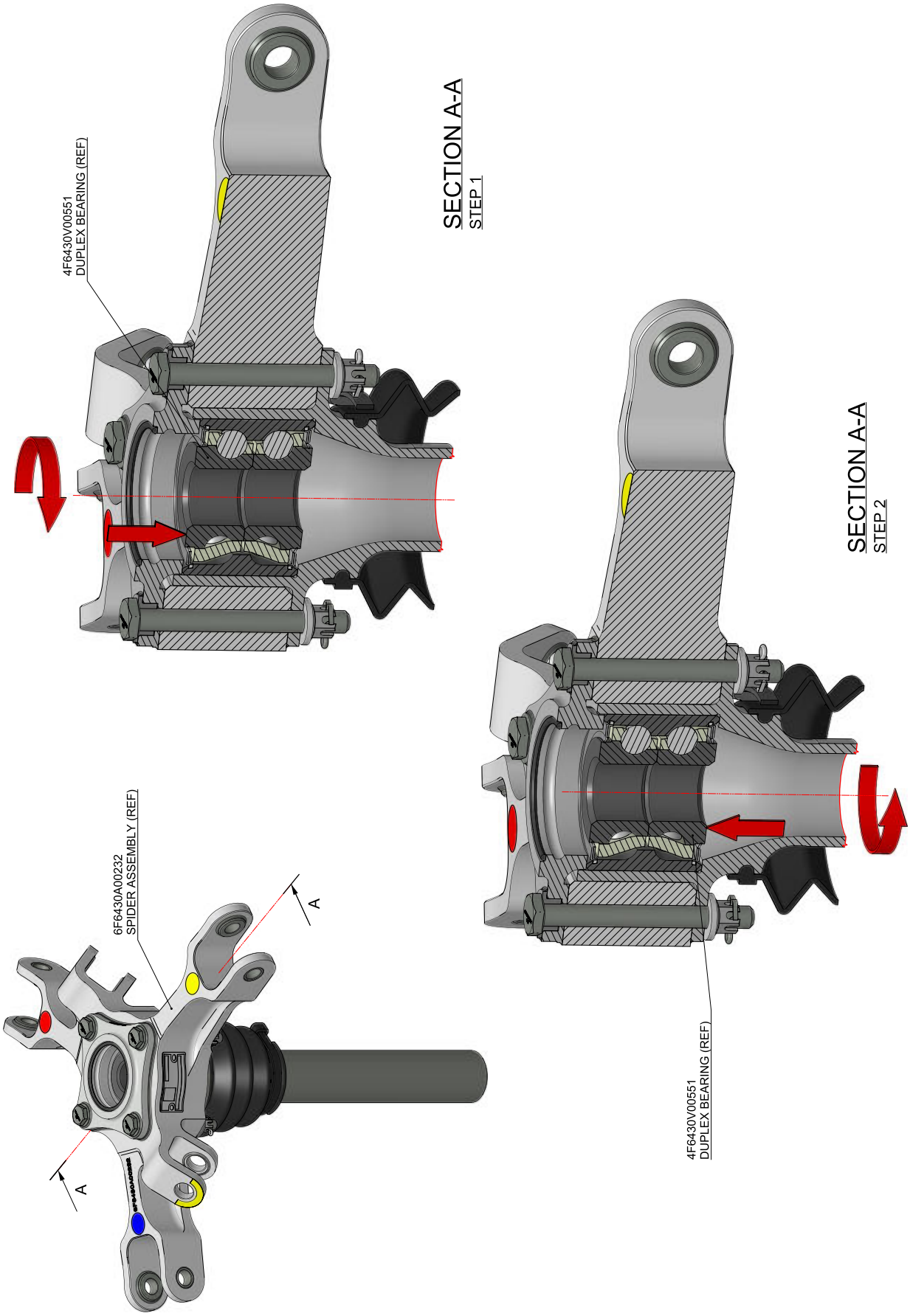
4F6430V00551
DUPLEX BEARING (REF)
SECTION A-A
STEP 1
6F6430A00232
SPIDER ASSEMBLY (REF)
A
A
SECTION A-A
STEP 2
4F6430V00551
DUPLEX BEARING (REF)

Figure 6

TABLE I

AIRCRAFT S/N	
P/N 6F6730V00331 TRA S/N	
TRA FH at SB COMPLIANCE DATE	

SB COMPLIANCE DATE:	
A/C FH at SB COMPLIANCE DATE:	
A/C LANDINGS at SB COMPLIANCE DATE:	

ACTION	Required	Obtained
PART I		
CASTELLATED NUT *paint mark check*	NO ROTATION BETWEEN PARTS	

Figure 7

TABLE II

AIRCRAFT S/N		**SB COMPLIANCE DATE:**	
P/N 4F6430V00551 TR DUPLEX BEARING S/N		**A/C FH at SB COMPLIANCE DATE:**	
TR DUPLEX BEARING FH at SB COMPLIANCE DATE		**A/C LANDINGS at SB COMPLIANCE DATE:**	

ACTION	Required	Obtained
PART II		
TR DUPLEX BEARING wear and damages check	NO FINDINGS	
TR SPIDER axial play check	ABSENCE of AXIAL PLAY	
TR DUPLEX BEARING roughness check	FREE AND EASY ROTATION	
TR DUPLEX BEARING breakaway force check – Blue Arm, clockwise direction	1.6 N thru 8.8 N	
TR DUPLEX BEARING breakaway force check – Red Arm, clockwise direction	1.6 N thru 8.8 N	
TR DUPLEX BEARING breakaway force check – Yellow Arm, clockwise direction	1.6 N thru 8.8 N	
TR DUPLEX BEARING breakaway force check – Blue Arm, counterclockwise direction	1.6 N thru 8.8 N	
TR DUPLEX BEARING breakaway force check – Red Arm, counterclockwise direction	1.6 N thru 8.8 N	
TR DUPLEX BEARING breakaway force check – Yellow Arm, counterclockwise direction	1.6 N thru 8.8 N	

Figure 8

TABLE III

AIRCRAFT S/N	
P/N 4F6430V00551 TR DUPLEX BEARING S/N	
TR DUPLEX BEARING FH at SB COMPLIANCE DATE	

SB COMPLIANCE DATE:	
A/C FH at SB COMPLIANCE DATE:	
A/C LANDINGS at SB COMPLIANCE DATE:	

ACTION	Required	Obtained
PART IV		
THERMAL STRIP Temperature check	TEMPERATURE SHALL NOT REACH A VALUE EQUAL TO OR ABOVE 121°C.	

Figure 9

TABLE IV

AIRCRAFT S/N	
P/N 4F6430V00551 TR DUPLEX BEARING S/N	
TR DUPLEX BEARING FH at SB COMPLIANCE DATE	

SB COMPLIANCE DATE:	
A/C FH at SB COMPLIANCE DATE:	
A/C LANDINGS at SB COMPLIANCE DATE:	

ACTION	Required	Obtained
PART V		
TR DUPLEX BEARING Particles check	ABSENCE of ANY PARTICLES	
TR DUPLEX BEARING Grease leakage check	ABSENCE of METALLIC PARTICLES	

Figure 10

TABLE V

AIRCRAFT S/N	
P/N 4F6430V00551 TR DUPLEX BEARING S/N	
TR DUPLEX BEARING FH at SB COMPLIANCE DATE	

SB COMPLIANCE DATE:	
A/C FH at SB COMPLIANCE DATE:	
A/C LANDINGS at SB COMPLIANCE DATE:	

ACTION	Required	Obtained
PART VI		
TR DUPLEX BEARING Roughness check by fingers	FREE AND EASY ROTATION	
TR DUPLEX BEARING wear, damages and particles check on the inboard side of the bearing	NO FINDINGS	

Figure 11

LEONARDO HELICOPTERS

AgustaWestland Products

Please send to the following address:	SERVICE BULLETIN COMPLIANCE FORM	Date:
LEONARDO S.p.A. **CUSTOMER SUPPORT & SERVICES - ITALY** **PRODUCT SUPPORT ENGINEERING & LICENSES DEPT.** Via Giovanni Agusta, 520 21017 Cascina Costa di Samarate (VA) - ITALY Tel.: +39 0331 225036 Fax: +39 0331 225988	Number:	
	Revision:	

Customer Name and Address:	Telephone:
	Fax:
	B.T. Compliance Date:

Helicopter Model	S/N	Total Number	Total Hours	T.S.O.

Remarks:

Information:

We request your cooperation in filling this form, in order to keep out statistical data relevant to aircraft configuration up-to-date. The form should be filled in all its parts and sent to the above address or you can communicate the application also via Technical Bulletin Application Communication Section placed in Leonardo AW Customer Portal - MyCommunications Area. We thank you beforehand for the information given.