AGRAS T20

User Manual v1.2

2020.11

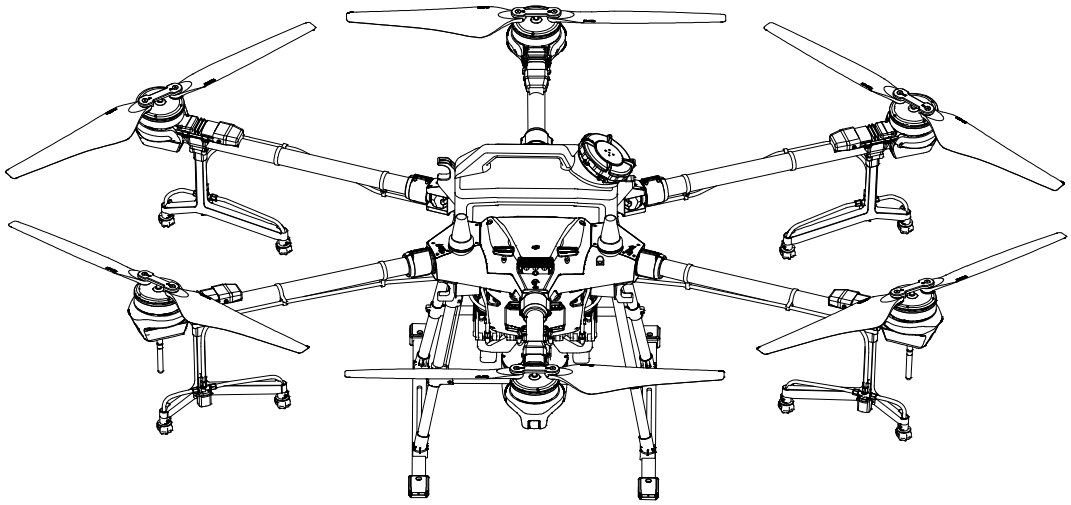

Searching for Keywords

Search for keywords such as “battery” and “install” to find a topic. If you are using Adobe Acrobat Reader to read this document, press Ctrl+F on Windows or Command+F on Mac to begin a search.

Navigating to a Topic

View a complete list of topics in the table of contents. Click on a topic to navigate to that section.

Printing this Document

This document supports high resolution printing.

⚠ Information

1. The AGRAS™ T20 does not come with a flight battery. Only purchase official DJI™ flight batteries (model: AB3-18000mAh-51.8V). Read the T20 Intelligent Flight Battery User Guide and take necessary precautions when handling the batteries to ensure your own safety. DJI assumes no liability for damage or injury incurred directly or indirectly from misusing batteries.
2. In this document, the altitude limit of 30 m means the altitude between the aircraft and the surface of the objects below it when the altitude stabilization function of the radar module is enabled. If the function is disabled, the altitude limit means the altitude between the aircraft and the takeoff point.

Using This Manual

Legend

⚠ Important Hints and tips Reference

Before Flight

The following documents have been produced to help you safely operate and make full use of your aircraft:

1. In the Box
2. Disclaimer and Safety Guidelines
3. Quick Start Guide
4. User Manual

Refer to the Agras T20 In the Box to check the listed parts and read the disclaimer and safety guidelines before flight. Refer to the quick start guide for more information on assembly and basic operation. Refer to the user manual for more comprehensive information.

Downloading DJI Assistant 2 for MG

Download DJI ASSISTANT™ 2 for MG from:
https://www.dji.com/t20/downloads

⚠ The operating temperature of this product is 0° to 40° C (32° to 104° F). It does not meet the standard operating temperature for military grade application (-55° to 125° C (-67° to 257° F)), which is required to endure greater environmental variability. Operate the product appropriately and only for applications that it meets the operating temperature range requirements of that grade.

Safety at a Glance

1. Pesticide Usage

- Avoid the use of powder pesticides as much as possible as they may reduce the service life of the spraying system.
- Pesticides are poisonous and pose serious risks to safety. Only use them in strict accordance with their specifications.
- Residue on the equipment caused by splashes or spills when pouring and mixing the pesticide can irritate your skin. Make sure to clean the equipment after mixing.

The Agras T20 aircraft is not a toy and is not suitable for children under the age of 18.
Note that the Safety at a Glance section only provides a quick overview of the safety tips. Make sure you read and understand this document and the Agras T20 User Manual.

- Use clean water to mix the pesticide and filter the mixed liquid before pouring into the spray tank to avoid blocking the strainer. Clear any blockage before using the equipment.
- Make sure to stay in an upwind area when spraying pesticide to avoid bodily harm.
- Wear protective clothing to prevent direct body contact with the pesticide. Rinse your hands and skin after handling pesticides. Clean the aircraft and remote controller after applying the pesticide.
- Effective use of pesticides depends on pesticide density, spray rate, spray distance, aircraft speed, wind speed, wind direction, temperature, and humidity. Consider all factors when using pesticides, but DO NOT compromise the safety of people, animals, or the environment in doing so.
- DO NOT contaminate rivers and sources of drinking water.

2. Environmental Considerations

- Fly at locations that are clear of buildings and other obstacles. DO NOT fly above or near large crowds.
- The recommended maximum operating altitude is 2 km (6,560 ft) above sea level. DO NOT fly over 3 km (9,842 ft) above sea level.
- Only fly in moderate weather conditions with temperatures between 0° and 40° C (32° and 104° F).
- Make sure that your operations do not violate any applicable laws or regulations, and that you have obtained all appropriate prior authorizations. Consult the relevant government agency or authority, or your lawyer before flight to ensure you comply with all relevant laws and regulations.
- DO NOT operate any part of the aircraft indoors.

3. Pre-Flight Checklist

Make sure to check all of the following:

- Remote controller and aircraft batteries are fully charged.
- All parts are in good condition. Replace aged or broken parts before flight.
- Landing gear and spray tank are firmly in place.
- Propellers and frame arms are unfolded and arm sleeves are firmly tightened. Propellers are in good condition and firmly tightened. There is nothing obstructing the motors and propellers.
- Spraying system is not blocked and works properly.
- Compass is calibrated after being prompted to do so in the app.

4. Ingress Protection Rating Description

The T20 is waterproof, dustproof, and corrosion-resistant when it is functioning normally. Under stable laboratory conditions, the aircraft has a protection rating of IPX6 (IEC standard 60529)

and can be cleaned using a small amount of water. The aerialelectronics system (barometer excluded), spray control system, ESC system, and radar module has a protection rating of up to IP67. However, this protection rating is not permanent and may reduce over time after long-term use due to aging and wear. The product warranty does not cover water damage. The protection ratings of the aircraft mentioned above may decrease in the following scenarios:

- There is a collision and the seal structure is deformed.
- The seal structure of the shell is cracked or damaged.
- The waterproof covers are not properly secured.

5. Operation

- Stay away from the rotating propellers and motors.
- The takeoff weight must not exceed 45.5 kg when using near sea level. Note that when using at a higher sea level, the takeoff weight capacity will be reduced.
- Once the operating altitude reaches 1 km (3,280 ft), the payload capacity of the spray tank is reduced by 2 kg. For every additional km, the payload capacity will be reduced another 2 kg.
- Maintain a visual line of sight (VLOS) of your aircraft at all times.
- DO NOT use the Combination Stick Command (CSC) or other methods to stop the motors when the aircraft is airborne unless in an emergency situation.
- DO NOT answer incoming calls during flight. DO NOT fly under the influence of alcohol or drugs.
- If there is a low battery warning, land the aircraft at a safe location.
- If the radar module is unable to work properly in the operating environment, the aircraft will be unable to avoid obstacles during Return to Home (RTH). All that can be adjusted is the flight speed and altitude, as long as the remote controller is still connected.
- After landing, stop the motors, power off the aircraft, and power off the remote controller. Otherwise, the aircraft may enter Failsafe RTH automatically due to remote controller signal loss.
- Maintain full control of the aircraft at all times and do not rely on the DJI Agras app. The obstacle avoidance function is disabled in certain situations. Keep the aircraft within VLOS and pay close attention to its flight. Use your discretion to operate the aircraft and manually avoid obstacles in a timely manner. It is important to set an appropriate Failsafe and RTH altitude before each flight.

6. Maintenance and Upkeep

- DO NOT use aged, chipped, or broken propellers.
- To avoid damaging the landing gear, remove or empty the spray tank during transportation or when not in use.
- Recommended storage temperature (when the spray tank, flow meter, pumps, and hoses are empty): -20° to 40° C (-4° to 104° F).
- Clean the aircraft immediately after spraying. Inspect the aircraft regularly. Refer to Product Care in the Agras T20 Disclaimer and Safety Guidelines for more information about maintenance guidelines.

7. Observe Local Laws and Regulations

- You can find a list of DJI GEO zones at http://www.dji.com/flysafe. Note that the DJI GEO zones are not a replacement for local government regulations or good judgment.
- Avoid flying at altitudes above 30 m (98 ft).*

* In this document, the altitude limit of 30 m means the altitude between the aircraft and the surface of the objects below it when the altitude stabilization function of the radar module is enabled. If the function is disabled, the altitude limit means the altitude between the aircraft and the takeoff point.

The flying altitude limit varies in different countries or regions. Make sure to fly at the altitudes outlined by local laws and regulations.

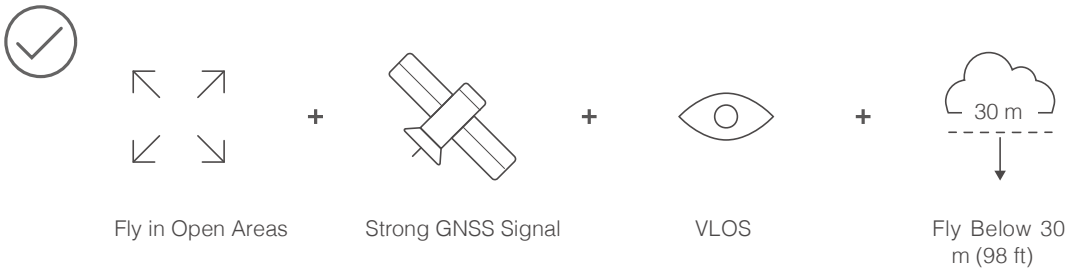

Fly in Open Areas + Strong GNSS Signal + VLOS + Fly Below 30 m (98 ft)

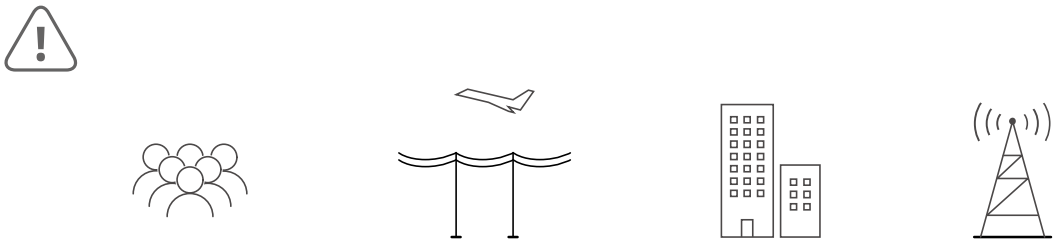

Avoid flying over or near crowds, high voltage power lines, or bodies of water.
Strong electromagnetic sources such as power lines, base stations, and tall buildings may affect the onboard compass.

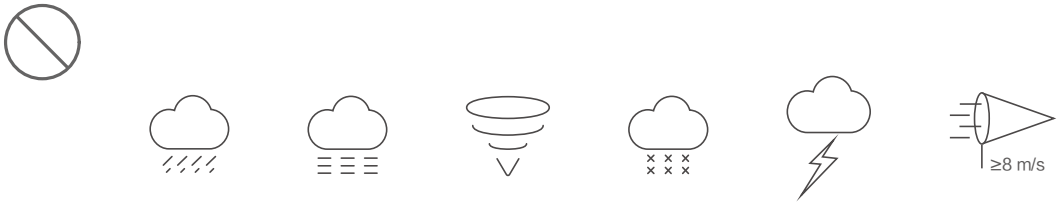

DO NOT use the aircraft in adverse weather conditions such as winds exceeding 28 kph (17 mph), heavy rain (precipitation rate exceeding 25 mm (0.98 in) in 12 hours), fog, snow, lightning, tornadoes, or hurricanes.

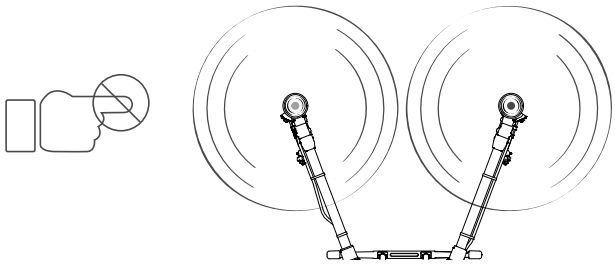

Stay away from the rotating propellers and motors.

GEO Zones

Learn more at:
http://www.dji.com/flysafe

Contents

Product Profile

Introduction

The Agras T20 features a brand-new design including a foldable frame and a quick-release spray tank and flight battery, making replacement, installation, and storage easy. The stable and reliable modular aerial-electronics system is integrated with a dedicated industrial flight controller, OCUSYNC™ 2.0 HD transmission system, and RTK module. It has dual IMUs and barometers and adopts a propulsion control system redundancy design including both digital and analog signals to ensure flight safety.

The GNSS+RTK dual-redundancy system is compatible with GPS, GLONASS, BeiDou, and Galileo. The T20 also supports centimeter-level positioning[1] when used with the onboard D-RTK™. Dual-antenna technology provides strong resistance against magnetic interference.

The upgraded spraying system features an improvement in payload. It also has a 4-channel electromagnetic flow meter to ensure consistent spraying for all sprinklers.

The new-generation omnidirectional digital radar provides functions such as terrain following and obstacle sensing and circumventing in all horizontal directions. The aircraft is equipped with a wide-angle FPV camera that enables users to observe the landscape from the front of the aircraft.

The aircraft has a backup power system, which supplies power to the aircraft for approximately 20 seconds when the Intelligent Flight Battery is powered off due to malfunction during flight. This allows the aircraft to avoid accident and land safely.

Due to its industrial design and material, the T20 is dustproof, waterproof, and corrosion-resistant. The aircraft has a protection rating of IPX6 (IEC standard 60529), while the protection rating of the aerial-electronics system, spray control system, propulsion ESC system, and radar module is up to IP67.

The Smart Controller 2.0 uses the DJI OcuSync 2.0 transmission system, has a maximum control distance of up to 3 km[2] , and supports Wi-Fi and Bluetooth functions. The remote controller is equipped with a 5.5-inch bright, dedicated screen that has the DJI Agras app built in, significantly improving smoothness and stability. When the RTK dongle is connected to the remote controller, users can plan operations to centimeter-level precision. The Multi-Aircraft Control mode of the remote controller can be used to coordinate the operation of up to five aircraft at the same time, enabling pilots to work efficiently. Both the built-in battery and external battery can be used to supply power to the remote controller. The total working time is up to 4 hours, which fully meets the requirements for long and high-intensity operations.

Feature Highlights

The modular design of the T20 simplifies assembly. The airframe can be quickly folded, making it easy for transportation. Both the Intelligent Flight Battery and spray tank are easily swappable, significantly improving the efficiency of power and liquid supply.

The T20 has an aerial-electronics system with a multiple redundancy design, and also has onboard D-RTK antennas, supporting dual-antenna technology that provides strong resistance against magnetic interference to ensure flight safety.

Thanks to the dedicated DJI industrial flight control system, the T20 offers four operation modes:

[1] The remote controller is able to reach its maximum transmission distance (FCC / NCC: 5 km (3.11 mi); CE / KCC / MIC / SRRC: 3 km (1.86 mi)) in an open area with no electromagnetic interference, and at an altitude of approximately 2.5 m (8.2 ft).

[2] The remote controller is able to reach its maximum transmission distance (FCC / NCC: 5 km (3.11 mi); CE / KCC / MIC / SRRC: 3 km (1.86 mi)) in an open area with no electromagnetic interference, and at an altitude of approximately 2.5 m (8.2 ft).

Route, A-B Route, Manual, and Manual Plus.

DJI Agras app automatically produces flight routes based on your planned fields. To start, simply select the field from the field list. Plan a field by walking with the remote controller, an RTK Dongle, an RTK handheld mapping device, or by flying the aircraft to waypoints, according to the application scenarios. In scenarios with complicated terrain, use the Phantom 4 RTK and DJI Terra to plan 3D flight routes, and import the routes to DJI Agras for operation.

In A-B Route operation mode, the aircraft travels along a planned route and sprays its liquid payload. Users can set the line spacing, flying speed, and other parameters.

In Manual operation mode, users can start and stop spraying manually and also adjust the spray rate.

In Manual Plus operation mode, the flight speed is restricted and the heading is locked. Except for the heading, users can control the movement of the aircraft via the control sticks. Press button C1 or C2 on the remote controller or the corresponding button in the app and the aircraft will fly one line spacing to the left or right. Note that button C1 and button C2 are customizable in the app.

The T20 also includes the Operation Resumption function. When pausing the operation in Route or A-B Route operation mode, Operation Resumption records a breakpoint for the aircraft. Users can resume from the breakpoint when continuing the operation.

The omnidirectional digital radar works automatically in Route, A-B Route, and Manual Plus operation modes during both day and night, without being affected by light or dust. Altitude detection and stabilization functions are available in forward, backward, and downward directions while Obstacle Avoidance is available in all horizontal directions. The radar module can detect the angle of a slope and automatically adjust to maintain the same distance with the surface even in mountainous terrain. In Route and A-B Route operation modes, the radar can effectively sense obstacles and plan a flight route to actively circumvent obstacles in all horizontal directions. Note that this is disabled by default. Users can enable it in the app.

The remote controller features Multi-Aircraft Control mode (coming soon), which can be used to coordinate the operation of up to five aircraft simultaneously. Turn the aircraft control switch dial on the remote controller to switch control between different aircraft.

Preparing the Aircraft

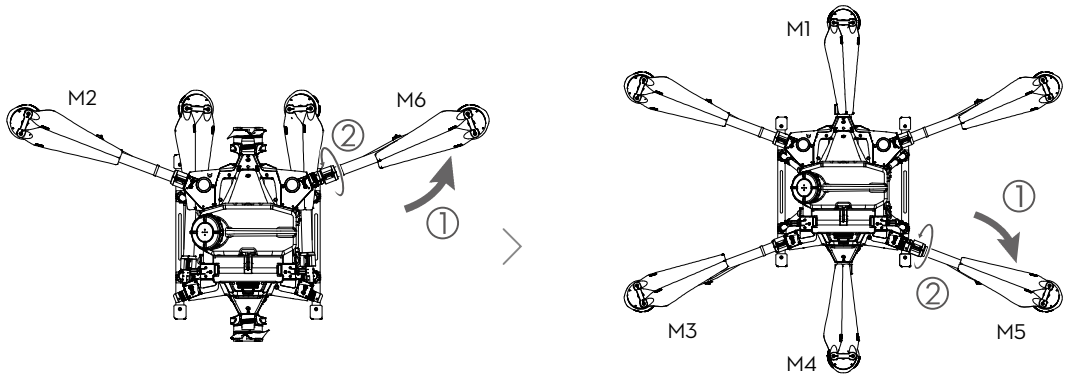

Unfold the M2 and M6 arms, and tighten the two arm sleeves.

Unfold the M3 and M5 arms followed by M1 and M4, and then tighten the four arm sleeves.

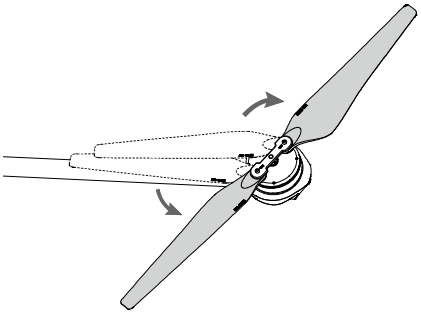

Unfold the propeller blades.

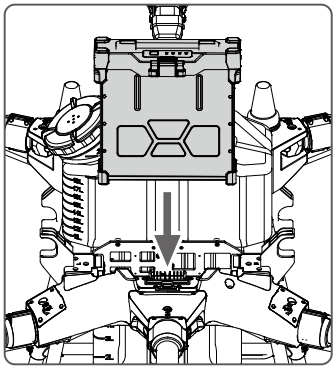

Insert the Intelligent Flight Battery into the aircraft until you hear a click.

- Before using the aircraft, make sure to mount the backup battery. Otherwise, the aircraft cannot take off. Mount and use the backup battery in strict accordance with the Agras T20 Backup Battery User Guide.
- Make sure that the battery is firmly inserted into the aircraft. Only insert or remove the battery when the aircraft is powered off.
- To remove the battery, press and hold the clamp, and then lift the battery up.
- When folding the arms, make sure to fold the M3 and M5 arms first, and then the M2 and M6 arms. Otherwise, the arms may be damaged. Lift and lower the M1 and M4 arms gently to reduce wear and tear.

Preparing the Remote Controller

Mounting the External Battery

① Press and hold the battery release button.

② Insert the Intelligent Battery into the battery compartment. Make sure the bottom of the battery is aligned to the marking line in the compartment.

③ Push the battery to the bottom.

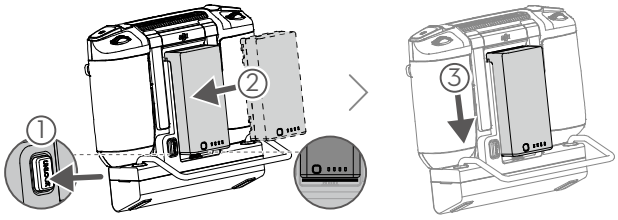

To remove the Intelligent Battery, press and hold the battery release button, then push the battery upward.

Mounting the 4G Dongle and SIM Card

⚠
- Only use a DJI-approved dongle. The dongle supports various network standards. Use a SIM card that is compatible with the chosen mobile network provider, and select a mobile data plan according to the planned level of usage.
- The dongle and SIM card enable the remote controller to access specific networks and platforms, such as the DJI AG platform. Make sure to employ them correctly. Otherwise, network access will not be available.

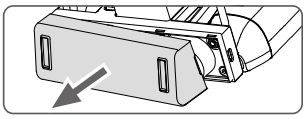

Remove the dongle compartment cover.

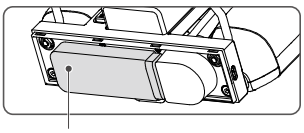

Insert the dongle into the USB port with the SIM card inserted into the dongle, and test the dongle.*

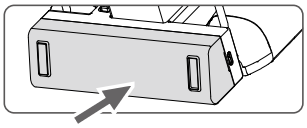

Reattach the cover firmly.

Mounting the RTK Dongle

When using the RTK planning method to plan the operation area, attach the RTK dongle to the USB-A port on the remote controller.

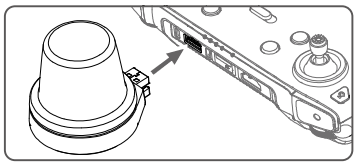

Adjusting the Antennas

Lift the antennas and adjust them. The strength of the remote controller signal is affected by the position of the antennas. When the angle between the antennas and the back of the remote controller is 80° or 180°, the connection between the remote controller and aircraft can reach its optimal performance.

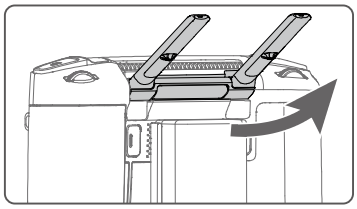

* Test procedure: Press the remote controller power button once, then press again and hold to power the remote controller on. In DJI Agras, tap ⚙ , and select Network Diagnostics. The dongle and SIM card are functioning properly if the status of all the devices in the network chain are shown in green.

Aircraft Overview

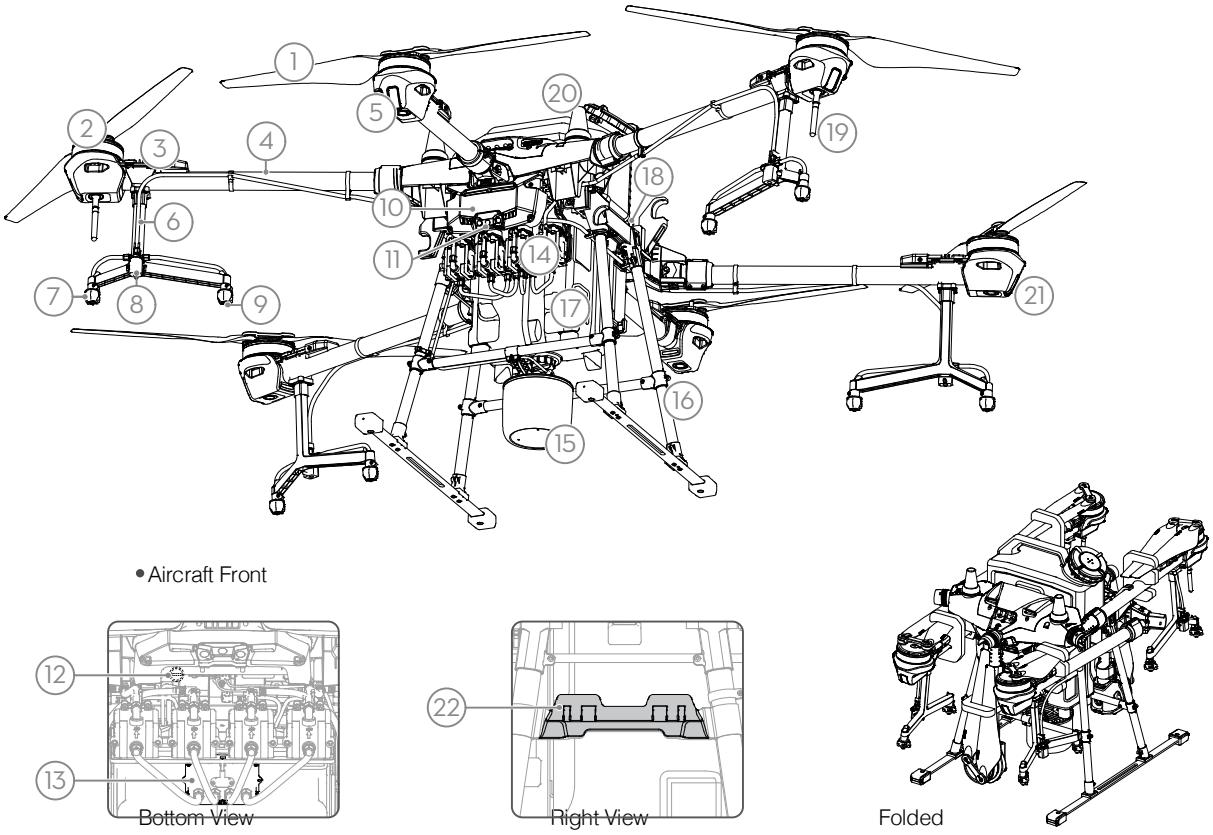

1. Propellers
2. Motors
3. ESCs
4. Frame Arms
5. Aircraft Front Indicators (on the three front arms)
6. Hoses
7. Sprinklers
8. Electromagnetic Exhaust Valves
9. Nozzles
10. Aerial-Electronics System
11. FPV Camera
12. USB-C Port (on the bottom of the aerial-electronics system, under the waterproof cover)
13. 4-Channel Electromagnetic Flow Meter
14. Delivery Pumps
15. Omnidirectional Digital Radar
16. Landing Gear
17. Spray Tank
18. Battery Compartment
19. OcuSync Antennas
20. Onboard D-RTK Antennas
21. Aircraft Status Indicators (on the three rear arms)
22. Remote Controller Holder

Remote Controller Overview

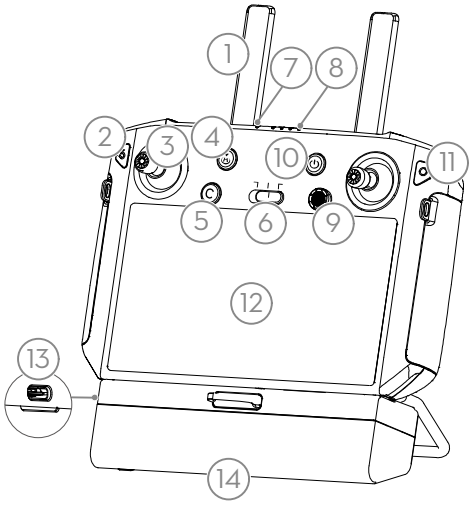

1. Antennas
   Relays aircraft control and image transmission signal.

2. ack Button / Function Button
   Press once to return to the previous page and press twice to go back to the homepage. Hold to view a guide to using button combinations. Refer to Button Combinations (p. 36) for more information.

3. ontrol Sticks
   Controls aircraft movement. Control mode can be set in the app.

4. RTH Button
   Press and hold this button to initiate RTH.

5. tton C3 (customizable)

6. Flight Mode Switch
   The three positions are P-mode (Positioning), A-mode (Attitude), and P-mode (Positioning).

7. Status LED
   Indicates whether the remote controller is linked to the aircraft.

8. Battery Level LEDs
   Displays current battery level of the internal battery.

9. 5D Button (customizable)

10. Power Button
    Used to power the remote controller on and off. When the remote controller is powered on, press the button to enter sleep mode or to wake up the controller.

11. Confirm Button
    Press to confirm a selection.

12. Touch Screen
    Tap to select. Android-based device to run DJI Agras.

13. USB-C Charging Port
    Use to charge the remote controller.

14. Dongle Compartment Cover
    Open the cover to mount or remove the 4G dongle.

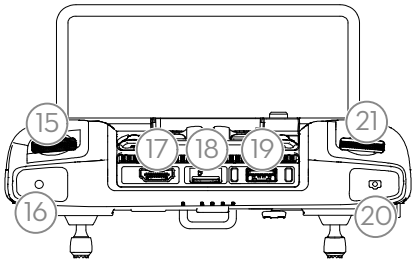

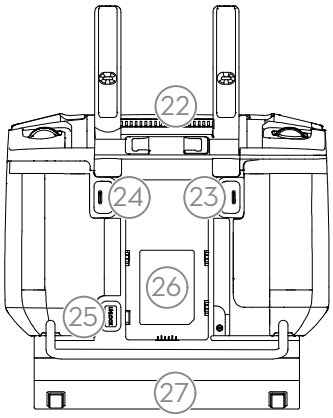

15. Spray Rate Dial
    Turn to adjust the spray rate in Manual operation mode.

16. Spray Button
    Press to start or stop spraying in Manual operation mode.

17. HDMI Port
    For video output.

18. microSD Card Slot
    Used to insert a microSD card.

19. USB-A Port
    Used to connect devices such as an RTK Dongle, or to connect to a computer to update firmware and obtain data stored in the remote controller via the DJI Assistant 2 software.

20. FPV / Map Switch Button
    In Operation View in DJI Agras, press to switch between FPV and the Map View.

21. ircraft Control Switch Dial
    Turn the dial to switch among the aircraft when using Multi-Aircraft Control function (supported later).

22. ir Outlet
    Used for heat dissipation. DO NOT cover the air vent during use.

23. tton C1 (customizable)
    When planning a field, press the button to switch between Obstacle mode and Waypoints mode. The function of the button cannot be customized while planning a field.

    When not planning a field, use the app to customize the button.

24. Button C2 (customizable)
    When planning a field, press the button to add a waypoint or an obstacle point. The function of the button cannot be customized when planning a field.

    When not planning a field, use the app to customize the button.

25. Battery Release Button

26. attery Compartment
    Used to mount an external Intelligent Battery.

27. andle

Aircraft

Aircraft Profile

The T20 uses a dedicated DJI industrial flight controller to provide multiple flight modes and operation modes for various applications. The omnidirectional digital radar provides terrain following to guide the aircraft to maintain a constant distance above crops in specific operation modes and is capable to actively circumvent obstacles in all horizontal directions. Functions such as operation resumption, system data protection, empty tank warning, low battery level warning, and RTH are also available.

Flight Modes

The aircraft will fly in P-mode by default. Users can switch between flight modes by toggling the Flight Mode switch on the remote controller when A-mode is enabled in the app.

P-mode (Positioning): The aircraft utilizes GNSS or the RTK module for positioning. When the GNSS signal is strong, the aircraft uses GNSS for positioning. When the RTK module is enabled and the differential data transmission is strong, it provides centimeter-level positioning. It will revert to A-mode when the GNSS signal is weak or when the compass experiences interference.

A-mode (Attitude): GNSS is not used for positioning and the aircraft can only maintain altitude using the barometer. The flight speed in A-mode depends on its surroundings such as the wind speed.

Attitude Mode Warning

In A-mode, the aircraft cannot position itself and is easily affected by its surroundings, which may result in horizontal shifting. Use the remote controller to position the aircraft.

Maneuvering the aircraft in A-mode can be difficult. Avoid flying in confined spaces or in areas where the GNSS signal is weak. Otherwise, the aircraft will enter A-mode, leading to potential flight risks. Land the aircraft in a safe place as soon as possible.

Operation Modes

The T20 provides Route, A-B Route, Manual, and Manual Plus operation modes. Users can use DJI Agras to switch between A-B Route, Manual, and Manual Plus.

Route Operation Mode

After the operation area and obstacles have been measured and settings have been configured, DJI Agras uses a built-in intelligent operation planning system to produce a flight route based on the user's input. Users can invoke an operation after planning a field. The aircraft will begin the operation automatically and follow the planned flight route. Operation resumption, altitude stabilization, obstacle avoidance, and auto obstacle circumvention of the radar module are available in Route operation mode. Use the app to adjust the spray amount and flying speed. Route operation mode is recommended for large spray area.

Field Planning

DJI Agras supports multiple planning methods for various applications.

Walk with RTK

There are two methods to plan the field by walking with RTK: RTK Dongle and Handheld RTK. Walking

with an RTK dongle uses the RTK dongle connected to the remote controller to record measurements, while walking with a handheld RTK uses the D-RTK 2 mobile station to record measurements. Make sure that the aircraft is powered off when planning your flight route.

The following descriptions use walking with RTK dongle as an example. Walking with a handheld RTK is similar to walking with an RTK dongle except users should walk with a mobile station instead of a remote controller.

1. Make sure that the RTK dongle is mounted to the remote controller.
2. Power on the remote controller, swipe from the top of the screen, and make sure that USB is disabled.
3. Go to the home screen in the app, tap Plan a Field, and select RTK Dongle. If both the RTK dongle and D-RTK 2 mobile station are connected, tap Plan a Field, then Walk with RTK, and select RTK Dongle.
4. Go to ⚙, tap RTK to select the RTK source, and complete configuration. Wait until the system status bar in the upper left corner of the screen turns green, indicating that RTK positioning is in use.
5. Walk with the remote controller alongside the boundary of the operation area and tap Waypoint C2 or press the C2 button on the remote controller at turning points.
6. Mark any obstacles:

   Use one of the two methods below to mark any obstacles in a target field.

   ① Tap Obstacle Mode C1 onscreen or press the C1 button on the back of the remote controller. Next, walk with the remote controller around the obstacle and tap Add Obstacle C2 onscreen or press the C2 button to add points for the obstacle. Finally, tap Waypoints Mode C1 or press the C1 button when finished.

   ② Tap Obstacle Mode C1 onscreen or press the C1 button on the back of the remote controller. Next, walk with the remote controller to the obstacle, and then tap Circle. A red circle will appear on the map. Drag the circle center to adjust the position of the obstacle, and drag the red point on the circumference to adjust the radius of the obstacle. Finally, tap Waypoints Mode C1 or press the C1 button when finished.
7. Continue measuring the field by walking with the remote controller alongside the boundary and adding waypoints at each corner of the field. Tap Done when the field has been measured and all obstacles have been marked. The app produces a flight route according to the perimeter and obstacles of the field.
8. Add calibration point: Walk with the remote controller to the location of each calibration point. Tap Calibration Point onscreen.

   The calibration points are used to offset the bias of the flight route caused by the positioning difference. Choose at least one existing landmark as the fixed reference point for calibration when executing the same operation. If none are available, use an easily identifiable object such as a metal stake.

When using the D-RTK 2 mobile station for field planning, refer to the D-RTK 2 Mobile Station User Guide to link the remote controller and mobile station, and make sure that the mobile station is the device controlled by the remote controller.

Walk with RC

Users should walk along the boundary of the field or the obstacles with the remote controller for measurements. Make sure that the aircraft is powered off when planning your flight route.

