B. Regulatory Impact Analysis: E.O.12866

The MSPB has determined that this is not a significant regulatory action under E.O. 12866. Therefore, no regulatory impact analysis is required.

C. Regulatory Flexibility Act

The Regulatory Flexibility Act (RFA) requires an agency to prepare a regulatory flexibility analysis for rules unless the agency certifies that the rule will not have a significant economic impact on a substantial number of small entities. The RFA applies only to rules for which an agency is required to first publish a proposed rule. *See* 5 U.S.C. 603(a) and 604(a). As discussed above, the 2015 Act does not require agencies to first publish a proposed rule when adjusting CMPs within their jurisdiction. Thus, the RFA does not apply to this final rule.

D. Paperwork Reduction Act

This document does not contain information collection requirements subject to the Paperwork Reduction Act of 1995, Public Law 104–13 (44 U.S.C. Chapter 35).

E. Congressional Review Act

Pursuant to the Congressional Review Act (5 U.S.C. 801, *et seq.*), the Office of Information and Regulatory Affairs designated this rule as not a ''major rule'' as defined by 5 U.S.C. 804(2).

List of Subjects in 5 CFR Part 1201

Administrative practice and procedure, Civil rights, Government employees.

For the reasons set forth above, 5 CFR part 1201 is amended as follows:

PART 1201—PRACTICES AND PROCEDURES

■ 1. The authority citation for part 1201 continues to read as follows:

Authority: 5 U.S.C. 1204, 1305, and 7701, and 38 U.S.C. 4331, unless otherwise noted.

§ 1201.126 [Amended]

■ 2. Section 1201.126 is amended in paragraph (a) by removing ''$1,125'' and adding in its place ''$1,195.''

Jennifer Everling,

Acting Clerk of the Board.

[FR Doc. 2022–01122 Filed 1–20–22; 8:45 am]

BILLING CODE 7401–01–P

DEPARTMENT OF TRANSPORTATION

Federal Aviation Administration

14 CFR Part 39

[Docket No. FAA–2021–0189; Project Identifier AD–2020–00645–R; Amendment 39–21875; AD 2021–26–16]

RIN 2120–AA64

Airworthiness Directives; Various Restricted Category Helicopters

AGENCY: Federal Aviation Administration (FAA), DOT.

ACTION: Final rule.

SUMMARY: The FAA is adopting a new airworthiness directive (AD) for certain type certificated Model UH–1H restricted category helicopters. This AD was prompted by multiple reports of failure of the main driveshaft. This AD requires establishing a limit to replace certain main driveshafts, and a one-time and repetitive inspections of the main driveshafts. The FAA is issuing this AD to address the unsafe condition on these products.

DATES: This AD is effective February 25, 2022.

The Director of the Federal Register approved the incorporation by reference of certain publications listed in this AD as of February 25, 2022.

ADDRESSES: For service information identified in this final rule, contact U.S. Army Materiel Command Logistics Data Analysis Center (USAMC LDAC), ATTN: Equipment Publication Control Officers (EPCOs), Building 3305, Redeye Road, Redstone Arsenal, AL 35898–7466; telephone (256) 955–7716 or 1–866–211–3367; email *usarmy.redstone.ldac.mbx.logetm@mail.mil;* or at *https://enterprise.armyerp.army.mil.*

You may also contact the following as applicable:

Arrow Falcon Exporters Inc., 2081 S Wildcat Way, Porterville, CA 93257; telephone (559) 781–8604; fax (559) 781–9271; email *afe@arrowfalcon.com.*

Global Helicopter Technology, Inc., P.O. Box 180681, Arlington, Texas 76096; telephone (817) 557–3391; email *ghti@ghti.net.*

Hagglund Helicopters, LLC, 5101 NW A Avenue, Pendleton, OR 97801; telephone (800) 882–3554 or (541) 276–3554; fax (541) 276–1597.

JASPP Engineering Services, LLC., 511 Harmon Terrace, Arlington, TX 76010; telephone (817) 465–4495; or at *www.jjaspp.com.*

Northwest Rotorcraft, LLC, 1000 85th Ave. SE, Olympia, WA 98501; telephone (360) 754–7200; or at *www.nwhelicopters.com.*

Overseas Aircraft Support, Inc., P.O. Box 898, Lakeside, AZ 85929; telephone (928) 368–6965; fax (928) 368–6962.

Richards Heavylift Helo, Inc., 1181 Osprey Nest Point, Orange Park, FL 32073; (904) 472–1481; email *Glenn7444@msn.com.*

Rotorcraft Development Corporation, P.O. Box 430, Corvallis, MT 59828; telephone (207) 329–2518; email *administration@rotorcraftdevelopment.com.*

Southwest Florida Aviation International, Inc., 28000–A9 Airport Road, Bldg. 101, Punta Gorda, FL 33982–9587; telephone (941) 637–1161; fax (941) 637–6264; email *info@swfateam.org.*

Tamarack Helicopters, Inc., 2849 McIntyre Rd., Stevensville, MT 59870; telephone (406) 777–0144; or at *www.tamarackhelicopters.com.*

You may view the service information at the FAA, Office of the Regional Counsel, Southwest Region, 10101 Hillwood Pkwy., Room 6N–321, Fort Worth, TX 76177. For information on the availability of this material at the FAA, call (817) 222–5110. Service information that is incorporated by reference is also available at *https://www.regulations.gov* by searching for and locating Docket No. FAA–2021–0189.

Examining the AD Docket

You may examine the AD docket at *https://www.regulations.gov* by searching for and locating Docket No. FAA–2021–0189; or in person at Docket Operations between 9 a.m. and 5 p.m., Monday through Friday, except Federal holidays. The AD docket contains this final rule, any comments received, and other information. The address for Docket Operations is U.S. Department of Transportation, Docket Operations, M–30, West Building Ground Floor, Room W12–140, 1200 New Jersey Avenue SE, Washington, DC 20590.

FOR FURTHER INFORMATION CONTACT: Ameet Shrotriya, Aerospace Engineer, Delegation Oversight Section, DSCO Branch, Compliance & Airworthiness Division, FAA, 10101 Hillwood Pkwy., Fort Worth, TX 76177; telephone (817) 222–5525; email *ameet.shrotriya@faa.gov.*

SUPPLEMENTARY INFORMATION:

Background

The FAA issued a notice of proposed rulemaking (NPRM) to amend 14 CFR part 39 by adding an AD that would apply to restricted category Model UH–1H helicopters with KAflex main driveshaft part number (P/N) SKCP2180–1, SKCP2281–1,

SKCP2281–1R, or SKCP2281–103 installed. The NPRM published in the **Federal Register** on March 26, 2021 (86 FR 16126). The NPRM was prompted by multiple reports of failure of a main driveshaft. In the NPRM, the FAA proposed to require establishing a life limit for those part-numbered main driveshafts, removing and inspecting the main driveshaft, inspecting the alignment of the main driveshaft installation, and repetitive inspections of the main driveshaft. As an optional terminating action, the NPRM proposed to allow the installation of a certain part-numbered main driveshaft not affected by this unsafe condition. This condition, if not addressed, could result in loss of engine power to the transmission and subsequent loss of control of the helicopter.

Discussion of Final Airworthiness Directive

Comments

The FAA received comments from seven commenters. The commenters were Kamatics Corporation; Northwest Helicopters, LLC; Salmon River Helicopters; and four individuals. The following presents the comments received on the NPRM and the FAA's response to each comment.

Request Regarding the FAA's Justification of the Unsafe Condition

Salmon River Helicopters and two individual commenters requested information about the driveshaft failures and one individual commenter asked if the issue is unsafe.

The FAA utilized the FAA's Service Difficulty Reporting System (SDRS) database,[1] the National Transportation Safety Board (NTSB) database,[2] [3] manufacturer reports of failures, and other sources to identify seven failures. The seven failures are: 891 Total hours time-in-service (TIS) of the main driveshaft, 1997, source: NTSB Accident Number SEA97LA126; time in service not identified, 2005, source: FAA Service Difficult Report Unique Control #2005FA0000785; 3341 total hours TIS of the main driveshaft, 2007, source: Manufacturer; 2432 total hours TIS of the main driveshaft, 2010, source: Manufacturer; 7598.6 total hours TIS since last inspection, 2015, source NTSB Accident Number WPR15LA178; 4353 total hours TIS of the main driveshaft, 2016, source: Manufacturer; and time in service not identified, 2020, source: Australian Transport Safety Bureau. Based on recent review of collected data, which factored in the usage of the main driveshafts, the FAA has determined that an unsafe condition exists.

Requests Pertaining to the Applicability

An individual commenter asked for information about main driveshaft P/Ns SKCP2180–1 and SKCP2281–1R.

Main driveshaft P/Ns SKCP2180–1 and SKCP2281–1R are older P/Ns that currently have approval for installation in the domestic fleet and could be in service. Those two P/Ns are included in this AD due to design similarity and the determination that they are affected by the unsafe condition in this AD.

An individual commenter stated that National Stock Number (NSN) 615–01–072–5670 is used for both main driveshaft P/N CP2281–103, which is affected by this AD, and main driveshaft P/N SKCP3303–1, which is not affected by this AD. The commenter asked how main driveshaft P/N CP2281–103 is affected by this AD and not main driveshaft P/N SKCP3303–1 when, according to the NSN, they are built to the same standard.

An NSN is an identification label assigned to an item or a group of similar items, not limited to aircraft parts, and is used for procurement purposes in the Department of Defense (DOD) inventory. An NSN provides a common nomenclature of function, not a standard, and is used in a catalog system that is cross-compatible within multiple agencies under DOD. A P/N is assigned by the manufacturer. The applicability of this AD is narrowed down to any P/Ns that have an unsafe condition. Main driveshaft P/N SKCP3303–1 is an alternative part, and the FAA does not have information indicating that it is affected by the unsafe condition in this AD.

Requests Regarding Overhauling a Main Driveshaft

Northwest Helicopters, LLC, and an individual commenter asked if the 5,000 total hours TIS removal is a retirement life limit or an overhaul life limit. The individual commenter requested that if it is an overhaul life limit, the AD state that KAflex main driveshaft P/N SKCP2281–103 can be overhauled in accordance with the US Army, Depot Maintenance Work Requirement (DMWR) 55–1615–278.

The FAA partially agrees. The FAA agrees that a main driveshaft could be overhauled. Accordingly, the requirements proposed in paragraphs (g)(1) and (2) of the NPRM to remove the main driveshaft from service have been changed to replace the main driveshaft in this final rule. Additionally, clarification that the main driveshaft may be overhauled has been added to each instance to replace the main driveshaft in the Required Actions paragraph. The overhaul must be accomplished by following FAA-approved procedures. U.S. Army Aviation and Missile Command, DMWR for Main Drive Shaft DMWR 55–1615–278, Original Issuance, dated September 30, 2009 (DMWR 55–1615–278), specifies procedures that are not FAA-approved. The FAA disagrees with requiring DMWR 55–1615–278 to accomplish an overhaul as it requires specialized tooling to which owners/operators may not have access. Operators may, however, under the provisions of paragraph (h) of this AD, request approval of an alternative method of compliance (AMOC) to use DMWR 55–1615–278.

Kamatics Corporation stated that an older main driveshaft can be rebuilt or upgraded into main driveshaft P/N SKCP3303–1 at a lower cost than installing a new main driveshaft and requested the FAA add this alternative cost information.

The FAA agrees that some main driveshafts could be overhauled into main driveshaft P/N SKCP3303–1 and has updated the Costs of Compliance section accordingly.

Request Regarding Determining the Total Hours TIS of the Main Driveshaft

Kamatics Corporation stated that service hours for most of the fielded main driveshafts is often not known and an individual commenter asked what to do if the proof of time since new on the main drive shaft is not recorded in any aircraft logs.

The FAA recognizes that this situation could exist. In light of this, the FAA has determined to require using the helicopter's total hours TIS if the total hours TIS of the main driveshaft cannot be determined.

Request To Restrict Accomplishment of Certain AD Requirements

Kamatics Corporation requested the AD require that any main driveshaft teardown be accomplished by an FAA-approved facility. Kamatics Corporation stated that inspection for wear within critical bolt joints requires a teardown. Kamatics Corporation stated that UH–1H Technical Manual paragraph 6–24.5 of Change 13 states ''do not attempt to loosen or tighten any hardware (with respect to the drive shaft).''

The FAA disagrees. While the owner/operator may choose to have the actions

[1] *https://av-info.faa.gov/sdrx/Query.aspx.*

[2] To search for NTSB cases in 2008 and previous, go to: *https://www.ntsb.gov/Pages/AviationQuery.aspx.*

[3] To search for NTSB cases after 2008, go to: *https://data.ntsb.gov/carol-main-public/query-builder.*

required by this AD accomplished at an approved repair station, a mechanic that meets the requirements of 14 CFR part 65 subpart D is adequate to accomplish the actions required by this AD. Pertaining to paragraph 6–24.5 of the UH–1H Technical Manual, this AD does not require accomplishing the procedures specified in paragraph 6–24.5 of Headquarters, Department of the Army, Aviation Unit and Intermediate Maintenance Instructions Army Model UH–1H/V/EH–1H/X Helicopters, Technical Manual TM 55–1520–210–23–1, Change No. 42, dated April 14, 2003 (TM 55–1520–210–23–1 Change 42).

Requests Pertaining to Certain Service Information

An individual commenter requested the FAA revise the AD so actions that are required by following certain procedures in TM 55–1520–210–23–1 Change 42, would be required using Headquarters, Department of the Army, Aviation Unit and Intermediate Maintenance Instructions Army Model UH–1H/V/EH–1H/X Helicopters, Technical Manual TM 55–1520–210–23–1, Change No. 47, dated September 20, 2005 (TM 55–1520–210–23–1 Change 47), instead because TM 55–1520–210–23–1 Change 47 is the current change.

The FAA agrees to allow TM 55–1520–210–23–1 Change 47 as an option.

An individual commenter requested the FAA revise the AD to reference U.S. Army DMWR 55–1615–278 because this service information provides inspection and repair criteria for (main) driveshaft P/N SKCP2281–103 once it has been removed from the helicopter.

The FAA agrees. The FAA has reviewed this service information and added it to the Other Related Service Information section.

Request To Require Removal of Certain Part-Numbered Main Driveshafts From Service

Kamatics Corporation requested the FAA revise the AD to require removal of main driveshaft P/Ns SKCP2180–1, SKCP 2281–1, and SKCP2281–1R from service. According to Kamatics Corporation, those P/Ns were removed from service by the U.S. Army due to flex frame bolted joint deterioration.

The FAA disagrees because no data has been provided to substantiate the commenter's request.

Conclusion

The FAA reviewed the relevant data, considered any comments received, and determined that air safety requires adopting this AD as proposed. Accordingly, the FAA is issuing this AD to address the unsafe condition on these products. Except for minor editorial changes, including updating the contact information for the U.S. Army, clarifying the specific portions of TM 55–1520–210–23–1 Change 42 that are required to accomplish this Final rule, and the changes described previously, this AD is adopted as proposed in the NPRM. None of the changes will increase the economic burden on any operator.

Related Service Information Under 1 CFR Part 51

The FAA reviewed ''Figure 4–9. Engine Air Inlet Filter Installation'' on page 4–16; page 4–17; ''Figure 6–7. Transmission Positioning for Driveshaft Alignment'' on page 6–2; ''Figure 6–8. Tool Application—Use of Alignment Tool Set (T47)'' on page 6–3; and pages 6–21 through 6–24, of TM 55–1520–210–23–1 Change 42. This service information contains main driveshaft assembly figures and specifies procedures for the main driveshaft disassembly, and inspecting and correction of its alignment.

The FAA also reviewed ''Figure 4–9. Engine Air Inlet Filter Installation'' on page 4–16; page 4–17; ''Figure 6–7. Transmission Positioning for Driveshaft Alignment'' on page 6–2; ''Figure 6–8. Tool Application—Use of Alignment Tool Set (T47)'' on page 6–3; pages 6–21 through 6–24; and ''Figure 6–12.2. Main Driveshaft Installation & Removal Tool'' and ''Figure 6–12.3. Work Aid Tool Installed on Main Driveshaft'' on page 6–27, of TM 55–1520–210–23–1 Change 47. This service information specifies the same procedures as TM 55–1520–210–23–1 Change 42 with various updates throughout.

This service information is reasonably available because the interested parties have access to it through their normal course of business or by the means identified in **ADDRESSES**.

Other Related Service Information

The FAA reviewed DMWR 55–1615–278, for main driveshaft P/N SKCP2281–103, which specifies maintenance, overhaul, repair, assembly, and balance procedures.

Costs of Compliance

The FAA estimates that this AD affects 384 helicopters of U.S. registry. Labor rates are estimated at $85 per work-hour. Based on these numbers, the FAA estimates that operators may incur the following costs in order to comply with this AD.

Determining the total hours TIS of the main driveshaft takes about 0.5 work-hour for an estimated cost of about $43 per helicopter and $16,512 for the U.S. fleet. Removing and inspecting the main driveshaft takes about 4 work-hours for an estimated cost of $340 per helicopter and $130,560 for the U.S. fleet. Inspecting the installed main driveshaft takes about 1 work-hour for an estimated cost of about $85 per helicopter and $32,640 for the U.S. fleet, per inspection cycle. Inspecting the alignment of the main driveshaft installation takes about 2 work-hours for an estimated cost of $170 per helicopter and $65,280 for the U.S. fleet. If required, adjusting the alignment takes about 0.5 work-hour for an estimated cost of $43 per instance. Replacing a main driveshaft takes about 1 work-hour and parts cost about $54,000, for an estimated cost of $54,085 per replacement. Alternatively, overhauling a main driveshaft takes about 1 work-hour for removal and reinstallation and parts cost about $38,000, for an estimated cost of $38,085 per overhaul.

Authority for This Rulemaking

Title 49 of the United States Code specifies the FAA's authority to issue rules on aviation safety. Subtitle I, section 106, describes the authority of the FAA Administrator. Subtitle VII: Aviation Programs, describes in more detail the scope of the Agency's authority.

The FAA is issuing this rulemaking under the authority described in Subtitle VII, Part A, Subpart III, Section 44701: General requirements. Under that section, Congress charges the FAA with promoting safe flight of civil aircraft in air commerce by prescribing regulations for practices, methods, and procedures the Administrator finds necessary for safety in air commerce. This regulation is within the scope of that authority because it addresses an unsafe condition that is likely to exist or develop on products identified in this rulemaking action.

Regulatory Findings

This AD will not have federalism implications under Executive Order 13132. This AD will not have a substantial direct effect on the States, on the relationship between the national government and the States, or on the distribution of power and responsibilities among the various levels of government.

For the reasons discussed above, I certify that this AD:

(1) Is not a ''significant regulatory action'' under Executive Order 12866,

(2) Will not affect intrastate aviation in Alaska, and

(3) Will not have a significant economic impact, positive or negative, on a substantial number of small entities under the criteria of the Regulatory Flexibility Act.

List of Subjects in 14 CFR Part 39

Air transportation, Aircraft, Aviation safety, Incorporation by reference, Safety.

The Amendment

Accordingly, under the authority delegated to me by the Administrator, the FAA amends 14 CFR part 39 as follows:

PART 39—AIRWORTHINESS DIRECTIVES

■ 1. The authority citation for part 39 continues to read as follows:

Authority: 49 U.S.C. 106(g), 40113, 44701.

§ 39.13 [Amended]

■ 2. The FAA amends § 39.13 by adding the following new airworthiness directive:

2021–26–16 Various Restricted Category Helicopters: Amendment 39–21875; Docket No. FAA–2021–0189; Project Identifier AD–2020–00645–R.

(a) Effective Date

This airworthiness directive (AD) is effective February 25, 2022.

(b) Affected ADs

None.

(c) Applicability

This AD applies to restricted category Model UH–1H helicopters; current type certificate holders include but are not limited to Arrow Falcon Exporters Inc.; Global Helicopter Technology, Inc.; Hagglund Helicopters, LLC; JJASPP Engineering Services, LLC.; Northwest Rotorcraft, LLC; Overseas Aircraft Support, Inc.; Richards Heavylift Helo, Inc.; Rotorcraft Development Corporation; Southwest Florida Aviation International, Inc.; and Tamarack Helicopters, Inc., with KAflex main driveshaft part number (P/N) SKCP2180–1, SKCP2281–1, SKCP2281–1R, or SKCP2281–103 installed.

Note 1 to paragraph (c): Helicopters with an SW205 designation are Southwest Florida Aviation International, Inc., Model UH–1H helicopters.

(d) Subject

Joint Aircraft System Component (JASC) Code: 6310, Engine/Transmission Coupling.

(e) Unsafe Condition

This AD was prompted by multiple reports of failure of the main driveshaft. The unsafe condition, if not addressed, could result in loss of engine power to the transmission and subsequent loss of control of the helicopter.

(f) Compliance

Comply with this AD within the compliance times specified, unless already done.

(g) Required Actions

(1) Before further flight after the effective date of this AD, determine the total hours time-in-service (TIS) of the main driveshaft. If the total hours TIS of the main driveshaft cannot be determined, use the helicopter's total hours TIS as the total hours TIS of the main driveshaft for the action required by this paragraph.

(i) If the main driveshaft has accumulated less than 5,000 total hours TIS, before exceeding 5,000 total hours TIS, replace the main driveshaft. The main driveshaft may be overhauled in accordance with FAA-approved procedures to accomplish the replacement required by this paragraph.

Note 2 to paragraph (g)(1)(i): This note applies to paragraphs (g)(1)(i) and (ii), (g)(2), and (g)(3)(i) through (iv) of this AD. U.S. Army Aviation and Missile Command, Depot Maintenance Work Requirement for Main Drive Shaft DMWR 55–1615–278, Original Issuance, dated September 30, 2009, specifies procedures that are not FAA-approved.

(ii) If the main driveshaft has accumulated 5,000 or more total hours TIS, before further flight, replace the main driveshaft. The main drive shaft may be overhauled in accordance with FAA-approved procedures to accomplish the replacement required by this paragraph.

(2) Thereafter following paragraph (g)(1) of this AD, replace the main driveshaft before accumulating 5,000 total hours TIS. The main drive shaft may be overhauled in accordance with FAA-approved procedures to accomplish the replacement required by this paragraph.

(3) Within 25 hours TIS after the effective date of this AD, remove main driveshaft P/N SKCP2180–1, SKCP2281–1, SKCP2281–1R, or SKCP2281–103 by following ''6–24.3. Removal—Main Driveshaft P/N SKCP2281–103'' on page 6–24, including ''4–24. Removal—Air Inlet Filters'' on page 4–17 and ''Figure 4–9. Engine Air Inlet Filter Installation'' on page 4–16, of Headquarters, Department of the Army, Aviation Unit and Intermediate Maintenance Instructions Army Model UH–1H/V/EH–1H/X Helicopters, Technical Manual TM 55–1520–210–23–1, Change No. 42, dated April 14, 2003 (TM 55–1520–210–23–1 C 42), except where instructed to ''refer to figure 6–12.2'' in TM 55–1520–210–23–1 C 42, refer to Figure 1 to the introductory text of paragraph (g)(3) of this AD, and where instructed to ''see figure 6–12.3'' in TM 55–1520–210–23–1 C 42, see Figure 2 to the introductory text of paragraph (g)(3) of this AD, and:

Note 3 to the introductory text of paragraph (g)(3): Figures 6–12.2 and 6–12.3 are missing from TM 55–1520–210–23–1 C 42.

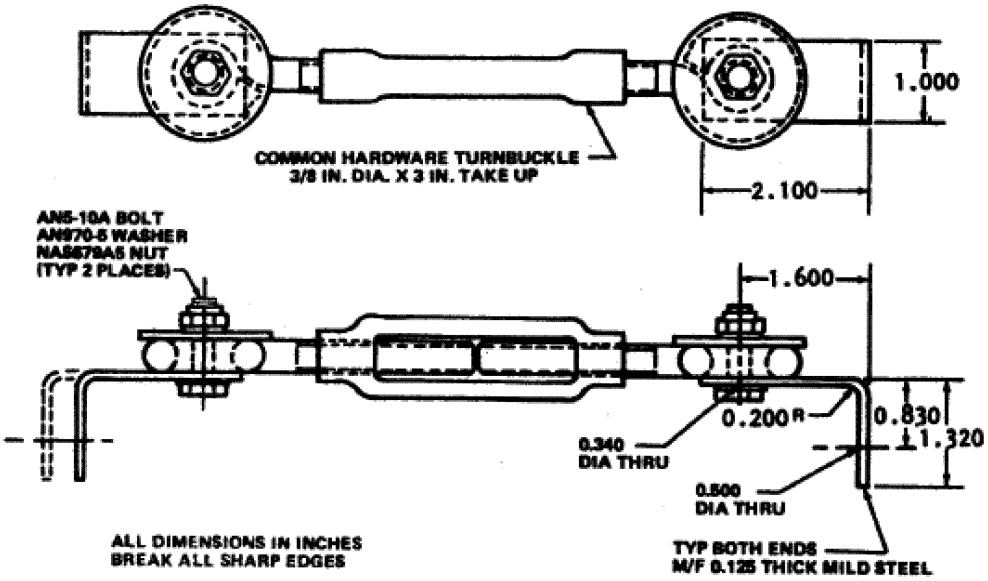

Figure 1 to the Introductory Text of Paragraph (g)(3) – Main Driveshaft Installation and Removal Tool

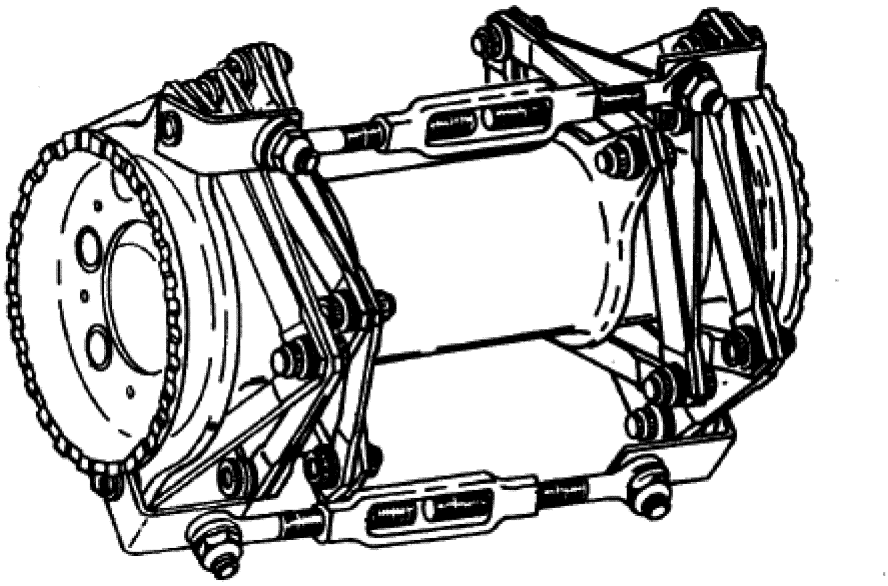

Figure 2 to the Introductory Text of Paragraph (g)(3) – Work Aid Tool Installed on Main Driveshaft

(i) Inspect for any broken, loose, or missing hardware. If there is broken or loose hardware, before further flight, remove the main driveshaft from service. If there is missing hardware, before further flight, replace the main driveshaft. The main drive shaft may be overhauled in accordance with FAA-approved procedures to accomplish the replacement required by this paragraph.

(ii) Visually inspect each flex frame and mount bolt torque stripe (red or yellow) for movement. If there is any torque stripe movement, before further flight, replace the main driveshaft. The main drive shaft may be overhauled in accordance with FAA-approved procedures to accomplish the replacement required by this paragraph.

(iii) Visually inspect each joint for fretting corrosion, which may be indicated by red metallic particles. If there is any grease, oil, or dirt covering a joint, clean the area and visually inspect again. If there is any fretting corrosion, before further flight, replace the main driveshaft. The main drive shaft may be overhauled in accordance with FAA-approved procedures to accomplish the replacement required by this paragraph.

(iv) Inspect the main driveshaft for mechanical damage, corrosion, an edge dent, and nick as shown in Figure 3 to paragraph (g)(3)(iv) of this AD. For the purposes of this inspection, mechanical damage may be indicated by a crack, scratch, or wear; and corrosion may be indicated by corrosion or pitting. If there is a scratch, wear, corrosion, pitting, an edge dent, or a nick within allowable limits, before further flight, repair the main driveshaft in accordance with FAA-approved procedures. If there is a crack, or a scratch, wear, corrosion, pitting, an edge dent, or a nick that exceeds allowable limits,

before further flight, replace the main driveshaft. The main drive shaft may be overhauled in accordance with FAA-approved procedures to accomplish the replacement required by this paragraph.

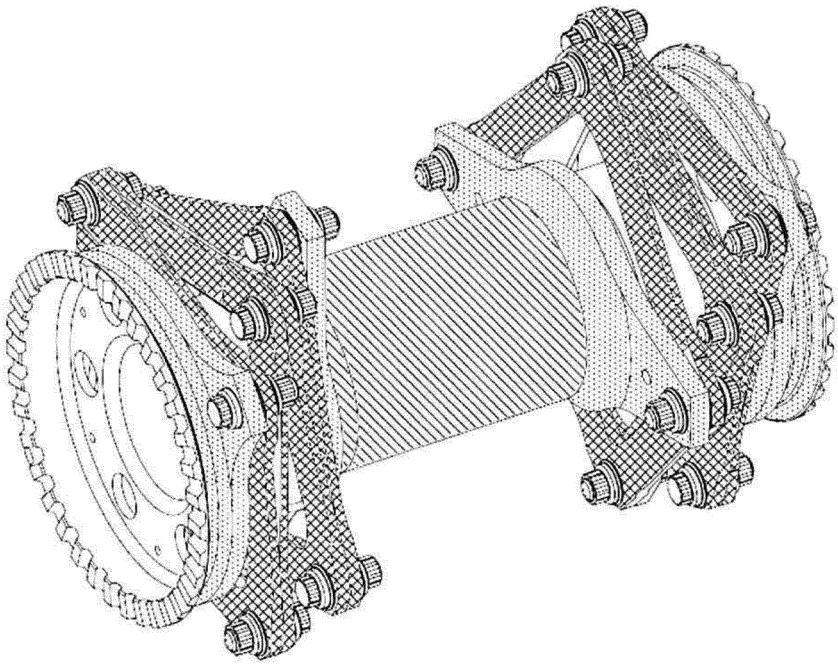

DAMAGE LOCATION SYMBOLS

Type of Damage	Maximum Damage and Repair Depth			
MECHANICAL	0.001" before and after repair	0.005" before and after repair	0.005" before and after repair	0.015" before and after repair
CORROSION	Surface, no pits	0.005" before and after repair	0.005" before and after repair	0.010" before and after repair
MAXIMUM AREA PER FULL DEPTH REPAIR	0.05 in^2	0.10 in^2	0.25 in^2	0.25 in^2
NUMBER OF REPAIRS	One per leg			
EDGE DENTS, NICKS	0.001 in	0.010 in	0.010 in	0.025 in

1. No cracks are permitted
2. Repairs must be no less than 1.000 inch apart.
3. Repairs not to be within 0.500 inches of bolt hole.
4. Faying surfaces must be free of any raised metal areas.
5. All repairs to be smooth at maximum depth and smoothly blended with surrounding surface.
6. Exposed bare metal may be touched up with Sermetel Product 1122 or 196. Zinc Chromate, primer color T, even though it does not blend cosmetically with Sermetel coating, can be used if Sermetel touch-up products are unavailable.
7. Sides and corners of flex frames are to be treated as areas.

Figure 3 to Paragraph (g)(3)(iv) – Damage Limits

(4) Before installing the main driveshaft following paragraph (g)(3) of this AD, and with the engine adapter installed in the end of the engine output shaft, inspect the alignment of the main driveshaft installation between the transmission input drive quill coupling and the engine output shaft adapter by following ''6–24. Alignment—Main Driveshaft,'' paragraphs c. through g. on pages 6–21 through 6–23, including ''Figure 6–7. Transmission Positioning for Driveshaft Alignment'' on page 6–2 (Figure 6–7), and ''Figure 6–8. Tool Application—Use of Alignment Tool Set (T47)'' on page 6–3 (Figure 6–8), of TM 55–1520–210–23–1 C 42. If there is misalignment, before further flight, adjust the alignment by following ''6–24. Alignment—Main Driveshaft,'' paragraphs h. through j. on page 6–23, including Figure 6–7 and Figure 6–8, of TM 55–1520–210–23–1 C 42.

(5) Within 300 hours TIS after the effective date of this AD, and thereafter within intervals not to exceed 300 hours TIS, with the main driveshaft installed, accomplish the actions in paragraphs (g)(3)(i) through (iv) of this AD.

(6) As an optional terminating action for the requirements of this AD, you may install KAflex main driveshaft P/N SKCP3303–1.

(7) As an option to accomplishing the actions by following the specified portions in TM 55–1520–210–23–1 C 42 in paragraphs (g)(3) and (4) of this AD, you may accomplish the actions by following those specified portions in Headquarters, Department of the Army, Aviation Unit and Intermediate Maintenance Instructions Army Model UH–1H/V/EH–1H/X Helicopters, Technical Manual TM 55–1520–210–23–1, Change No. 47, dated September 20, 2005 (TM 55–1520–210–23–1 C 47), and disregard exceptions to refer to Figure 1 and see Figure 2 to the introductory text of paragraph (g)(3) of this AD, instead refer to ''Figure 6–12.2. Main Driveshaft Installation & Removal Tool'' and see ''Figure 6–12.3. Work Aid Tool Installed on Main Driveshaft,'' on page 6–27 of TM 55–1520–210–23–1 C 47 as instructed in TM 55–1520–210–23–1 C 47.

(h) Alternative Methods of Compliance (AMOCs)

(1) The Manager, DSCO Branch, FAA, has the authority to approve AMOCs for this AD, if requested using the procedures found in 14 CFR 39.19. In accordance with 14 CFR 39.19, send your request to your principal inspector or local Flight Standards District Office, as appropriate. If sending information directly to the manager of the certification office, send it to the attention of the person identified in paragraph (i) of this AD. Information may be emailed to: *9-ASW-190-COS@faa.gov.*

(2) Before using any approved AMOC, notify your appropriate principal inspector, or lacking a principal inspector, the manager of the local flight standards district office/certificate holding district office.

(i) Related Information

For more information about this AD, contact Ameet Shrotriya, Aerospace Engineer, Delegation Oversight Section, DSCO Branch, Compliance & Airworthiness Division, FAA, 10101 Hillwood Pkwy., Fort Worth, TX 76177; telephone (817) 222–5525; email *ameet.shrotriya@faa.gov.*

(j) Material Incorporated by Reference

(1) The Director of the Federal Register approved the incorporation by reference (IBR) of the service information listed in this paragraph under 5 U.S.C. 552(a) and 1 CFR part 51.

(2) You must use this service information as applicable to do the actions required by this AD, unless the AD specifies otherwise.

(i) Headquarters, Department of the Army, Aviation Unit and Intermediate Maintenance Instructions Army Model UH–1H/V/EH–1H/X Helicopters, Technical Manual TM 55–1520–210–23–1, Change No. 42, dated April 14, 2003:

(A) ''Figure 4–9. Engine Air Inlet Filter Installation,'' page 4–16;

(B) Page 4–17;

(C) ''Figure 6–7. Transmission Positioning for Driveshaft Alignment,'' page 6–2;

(D) ''Figure 6–8. Tool Application—Use of Alignment Tool Set (T47),'' page 6–3; and

(E) Pages 6–21 through 6–24.

(ii) Headquarters, Department of the Army, Aviation Unit and Intermediate Maintenance Instructions Army Model UH–1H/V/EH–1H/X Helicopters, Technical Manual TM 55–1520–210–23–1, Change No. 47, dated September 20, 2005:

(A) ''Figure 4–9. Engine Air Inlet Filter Installation,'' page 4–16;

(B) Page 4–17;

(C) ''Figure 6–7. Transmission Positioning for Driveshaft Alignment,'' page 6–2;

(D) ''Figure 6–8. Tool Application—Use of Alignment Tool Set (T47),'' page 6–3;

(E) Pages 6–21 through 6–24; and

(F) ''Figure 6–12.2. Main Driveshaft Installation & Removal Tool'' and ''Figure 6–12.3. Work Aid Tool Installed on Main Driveshaft,'' page 6–27.

(3) For service information identified in this AD, contact U.S. Army Materiel Command Logistics Data Analysis Center (USAMC LDAC), ATTN: Equipment Publication Control Officers (EPCOs), Building 3305, Redeye Road, Redstone Arsenal, AL 35898–7466; telephone (256) 955–7716 or 1–866–211–3367; email *usarmy.redstone.ldac.mbx.logetm@mail.mil;* or at *https://enterprise.armyerp.army.mil.*

(4) You may view this service information at FAA, Office of the Regional Counsel, Southwest Region, 10101 Hillwood Pkwy., Room 6N–321, Fort Worth, TX 76177. For information on the availability of this material at the FAA, call (817) 222–5110.

(5) You may view this service information that is incorporated by reference at the National Archives and Records Administration (NARA). For information on the availability of this material at NARA, email: *fr.inspection@nara.gov,* or go to: *https://www.archives.gov/federal-register/cfr/ibr-locations.html.*

Issued on December 10, 2021.

Lance T. Gant,

Director, Compliance & Airworthiness Division, Aircraft Certification Service.

[FR Doc. 2022–00991 Filed 1–20–22; 8:45 am]

BILLING CODE 4910–13–P

DEPARTMENT OF TRANSPORTATION

Federal Aviation Administration

14 CFR Part 39

[Docket No. FAA–2021–0949; Project Identifier AD–2021–00115–E; Amendment 39–21915; AD 2022–02–18]

RIN 2120–AA64

Airworthiness Directives; General Electric Company Turbofan Engines

AGENCY: Federal Aviation Administration (FAA), DOT.

ACTION: Final rule.

SUMMARY: The FAA is adopting a new airworthiness directive (AD) for all General Electric Company (GE) CF6–80C2A1, CF6–80C2A2, CF6–80C2A3, CF6–80C2A5, CF6–80C2A5F, and CF6–80C2A8 model turbofan engines with an installed left-hand rear mount link assembly, part number (P/N) 1846M23G01. This AD was prompted by the manufacturer reducing the life limit for the affected left-hand rear mount link assembly. This AD requires revising the airworthiness limitations section (ALS) of the existing engine maintenance manual and the operator's existing approved continuous airworthiness maintenance program (CAMP). The FAA is issuing this AD to address the unsafe condition on these products.

DATES: This AD is effective February 25, 2022.

ADDRESSES: For service information identified in this final rule, contact General Electric Company, 1 Neumann Way, Cincinnati, OH 45215; phone: (513) 552–3272; email: *aviation.fleetsupport@ae.ge.com;* website: *https://www.ge.com.* You may view this service information at the FAA, Airworthiness Products Section, Operational Safety Branch, 1200 District Avenue, Burlington, MA 01803. For information on the availability of this material at the FAA, call (817) 222–5110. It is also available at *https://www.regulations.gov* by searching for and locating Docket No. FAA–2021–0949.

Examining the AD Docket

You may examine the AD docket at *https://www.regulations.gov* by searching for and locating Docket No. FAA–2021–0949; or in person at Docket Operations between 9 a.m. and 5 p.m., Monday through Friday, except Federal holidays. The AD docket contains this final rule, any comments received, and other information. The address for Docket Operations is U.S. Department of