Valid for Version(s): A-1, A-3, A-4, B-1, B-2, C-1.

ALERT SERVICE BULLETIN

SUBJECT: **FLIGHT CONTROL SYSTEM - Flight Controls Main Rotor**

Removal of the swashplate bellows and retrofit of the deflection ring of the swashplate

For the attention of	
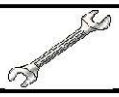	

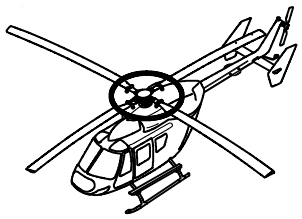

Revision No.	Date of issue
Revision 0	2014-03-31
Revision 1	2014-08-04
Revision 2	2015-07-30
Revision 3	2016-02-08
Revision 4	2016-05-23
Revision 5	2017-07-25

Summary:

With this Alert Service Bulletin (ASB), Airbus Helicopters Deutschland (AHD) prescribes the removal of the swashplate bellows and the retrofit of the deflection ring of the swashplate.

Reason for last Revision:

Please replace Revision 4 of this ASB with Revision 5.

With Revision 5 of this ASB the removal of the swashplate bellows and a repetitive inspection of the swashplate every 400 Fh remains unchanged. Furthermore with Revision 5 the retrofit of the deflection ring of the swashplate is prescribed, if not already performed with Revision 3. The repetitive inspection of the swashplate every 100 Fh has been deleted with Revision 5 and must no longer be performed.

Compliance:

The removal of the swashplate bellows contained in this ASB is mandatory (part of EASA AD).

AHD considers that the retrofit of the swashplate deflection ring and the 400 Fh inspection contained in this ASB are both essential (not part of EASA AD).

1. PLANNING INFORMATION

1.A. EFFECTIVITY

1.A.1. Helicopters/installed equipment

(a) MBB-BK117 A-1, A-3, A-4, B-1, B-2 and C-1, all S/N.

(b)

Swashplate	P/N 117-41904 or P/N 117-41905 or P/N 117-41905-001
Deflection ring	P/N 105-41902.06
Swashplate bellows	P/N B623M20X2240 or P/N 105-10113.05 or P/N 4638305043

1.A.2. Non-installed equipment

Swashplate	P/N 117-41904 or P/N 117-41905
Deflection ring	P/N 105-41902.06
Swashplate bellows	P/N B623M20X2240 or P/N 105-10113.05 or P/N 4638305043

1.B. ASSOCIATED REQUIREMENTS

Not applicable.

1.C. REASON

During a preflight check on a BO105, it was detected that the lower clamp of the swashplate bellows was missing. Prior to this, the loose clamp caused damage to the swashplate bearing ring.

Therefore with Revision 0 a new fixation of the swashplate bellows with cable ties was introduced. After the introduction of the new fixation, AHD was informed about several cases where the swashplate bellows fixed with cable ties became loose and separated from the swashplate.

To prevent damage caused by a separated bellows on the tail rotor blades, with Revision 2 of this ASB the removal of the swashplate bellows was prescribed. Furthermore, a repetitive inspection of the swashplate every 100 Fh and every 400 Fh was prescribed.

With this Revision 3 of this ASB, AHD prescribed the installation of a new swashplate bellows and a new deflection ring for the swashplate.

After Revision 3 was published, AHD was informed about several cases where the cable ties in the lower bellows fold have dislodged. Further investigations showed a non-conformity issue with the bellows manufacturer's tooling of swashplate bellows P/N B623M20X2240. Therefore with Revision 4 of this ASB, AHD prescribed the removal of the swashplate bellows and a repetitive inspection of the swashplate every 100 Fh and every 400 Fh.

Based on the experience from the fleet flying without bellows, AHD decided to approve the design of the swashplate without bellows and to remove the 100 Fh inspection interval. To improve and ensure the equality of the swashplate design in the fleet AHD also decided to prescribe the retrofit of the deflection ring, of the swashplate, which was already introduced with Revision 3 of the ASB.

Therefore, with Revision 5 of this ASB, AHD prescribes the removal of the swashplate bellows, the retrofit of the deflection ring of the swashplate and a repetitive inspection of the swashplate every 400 Fh.

1.D. DESCRIPTION

Remove the swashplate bellows. Retrofit the deflection ring of the swasplate. Do a repetitive inspection of the swashplate every 400 Fh.

1.E. COMPLIANCE

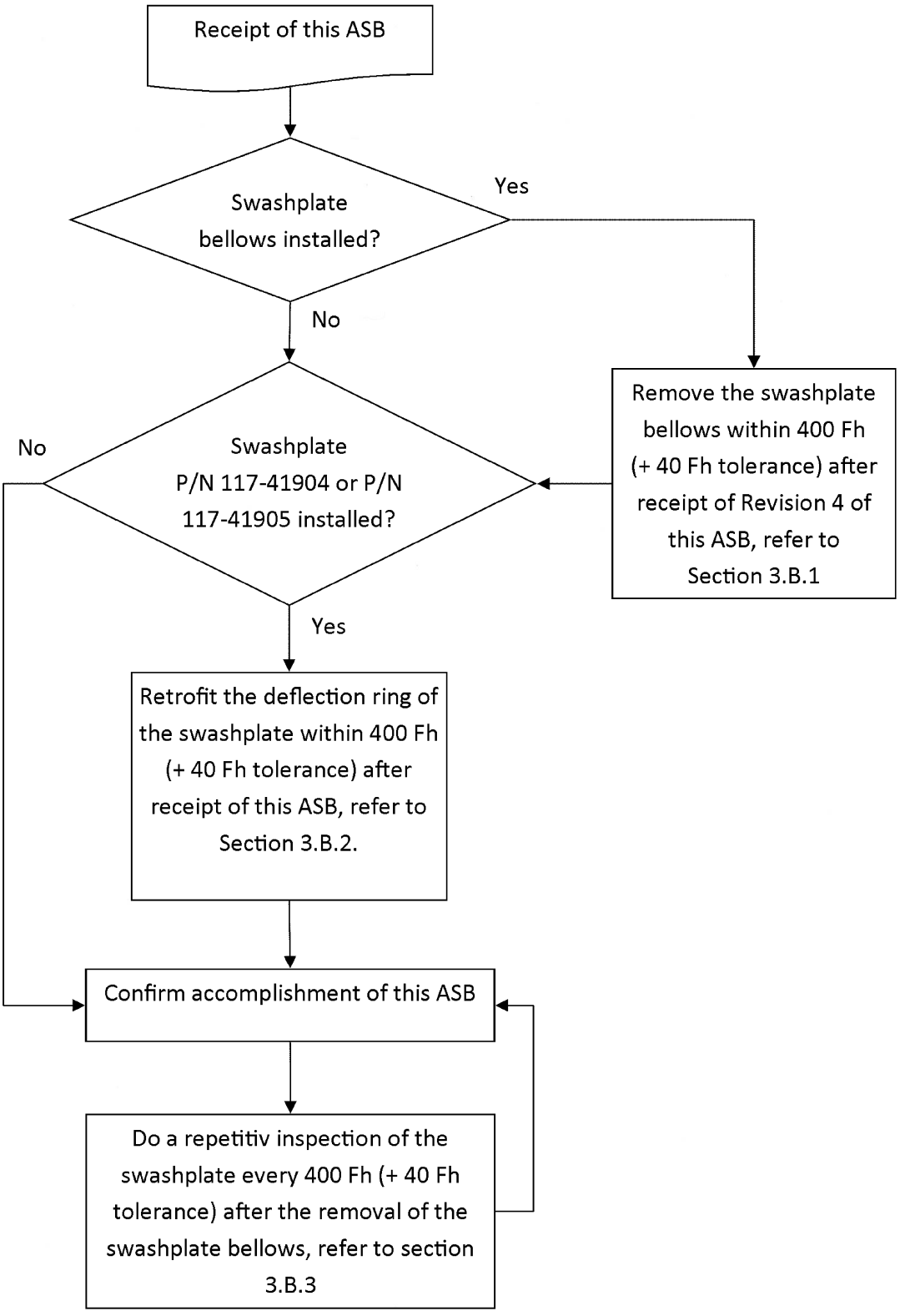

This document is available on the internet: www.airbushelicopters.com/techpub/

1.E.1. Compliance on the manufacturer's site

Helicopters/installed equipment:

Not applicable.

Non-installed equipment:

(a) The swashplate bellows must be removed before a main transmission is delivered at the latest, refer to Section 3.B.1.

(b) The new deflection ring must be installed before a main transmission is delivered at the latest, refer to Section 3.B.2.

(c) The new deflection ring must be installed before a swashplate is delivered at the latest , refer to Section 3.B.2.

1.E.2. Compliance in service

Helicopters/installed equipment:

EFFECTIVITY Helicopters with installed swashplate bellows.

(a) Remove the swashplate bellows within 400 Fh (+ 40 Fh tolerance) after receipt of Revision 4 ofthis ASB, refer to Section 3.B.1.

EFFECTIVITY Helicopters with swashplate P/N 117-41904 or P/N 117-41905.

(b) Retrofit the deflection ring of the swashplate within 400 Fh (+ 40 Fh tolerance) after receipt of this ASB, refer to Section 3.B.2.

EFFECTIVITY All helicopters.

(c) Do a repetitive inspection of the swashplate every 400 Fh (+ 40 Fh tolerance) **after** the removal of the swashplate bellows, refer to Section 3.B.3.

Non-installed equipment:

(a) The swashplate bellows must be removed before a main transmission is installed on a helicopter at the latest, refer to Section 3.B.1.

(b) The deflection ring of the swashplate must be retrofitted before a main transmission is installed on a helicopter at the latest, refer to Section 3.B.2.

(c) The deflection ring of the swashplate must be retrofitted before the swashplate is installed on a helicopter at the latest, refer to Section 3.B.2.

1.F. APPROVAL

Approval of modification(s):

The information or instructions contained in this document refer to change no. 4739. The technical content of this document is approved under the authority of DOA No. EASA.21J.700.

1.G. MANPOWER

Qualification	Mechanic	Electrician	Pilot	Others
Estimated Man-hours	approx. 3 h	-	-	-

1.H. WEIGHT AND BALANCE

Weight: - 0.274 kg

Arm longitudinal: + 4451 mm — Moment longitudinal: - 1220 kgmm

Arm lateral: 0 mm — Moment lateral: 0 kgmm

1.I. EFFECT ON ELECTRICAL LOADS

Not applicable.

1.J. SOFTWARE MODIFICATION EMBODIMENT RECORD

Not applicable.

1.K. REFERENCES

MM MBB-BK117.

1.L. DOCUMENTS AFFECTED

Publications already updated:

Not applicable.

Publications to be updated:

The changes to MM MBB-BK117 and IPC MBB-BK117 which are required as a result of this Alert Service Bulletin will be incorporated with one of the next revisions.

1.M. INTERCHANGEABILITY OR MIXABILITY OF PARTS

Interchangeability:

(a) After accomplishment of this ASB the swashplate bellows P/N 105-10113.05, P/N 4638305043 and P/N B623M20X2240 must no longer be installed to the swashplate.

(b) After accomplishment of this ASB the swashplate P/N 117-41905 must no longer be installed to the helicopter.

(c) After accomplishment of this ASB the swashplate P/N 117-41904 without identification “ASB MBB-BK117-40A-115” must no longer be installed to the helicopter.

Mixability:

Not applicable.

2. MATERIAL INFORMATION

2.A. MATERIAL: PRICE - AVAILABILITY - PROCUREMENT

Information on price and availability of required material kit SB-117-40A-115-2C-2 will be provided by AHD, Dept. Spares Order Administration on request.

2.B. INFORMATION CONCERNING INDUSTRIAL SUPPORT

Not applicable.

2.C. MATERIAL REQUIRED FOR EACH HELICOPTER/COMPONENT

Material kits to be ordered for one helicopter or one assembly:

Material kit SB-117-40A-115-2C-2 similar to design document D632M1001885.

No.	Key Word	Qty	New P/N	Old P/N	Remark
1	Outer deflection ring	2	B623M2002210	-	-
		1	-	105-41902.06	A
2	Name plate	1	MBBN3060E2AS	-	-
EFFECTIVITY If the upper swashplate bellows must be removed.					
3	Bellows	1	-	B623M20X2240 or 105-10113.05 or 4638305043	A
4	Cable tie	2	-	E0043-6C0P	A
5	Cable tie	7	-	E0043-2C0P	A

Remark:

A = AHD does not take back parts with old part numbers.

Consumable materials to be ordered separately:

Consumable materials to be ordered from the KLX Aerospace Solutions. The given CM numbers are refer to the MM list of consumable materials.
Website: https://www.klxaerospace.com
E-mail: integration@klx.com

WARNING

RESPECT THE SAFETY DATA SHEET OF THE MANUFACTURER.

No.	Key Word	Qty (approx)	Specification **	CM	Remark
1	Lacquer	5 g	-	421	-
2	Lockwire	a.n.*	EN3628-0.80 LN9424-1.4546.9-0,8	776	-
* a.n. = as needed ** Specification refer to MM, 03-5.					

2.D. MATERIAL TO BE RETURNED

Not applicable.

3. ACCOMPLISHMENT INSTRUCTIONS

3.A. GENERAL

Not applicable.

3.B. OPERATIONAL PROCEDURE

3.B.1. Removal of the swashplate bellows

EFFECTIVITY Helicopters with swashplate bellows P/N 105-10113.05 or P/N 4638305043.

(a) Remove the cable ties or clamps (2, Fig. 1) and cable ties (3) from the swashplate bellows (4).

(b) Remove the swashplate bellows (4, Fig. 1) from the swashplate (5) and from the hub-shaft (1).

(c) Discard the swashplate bellows (4, Fig. 1).

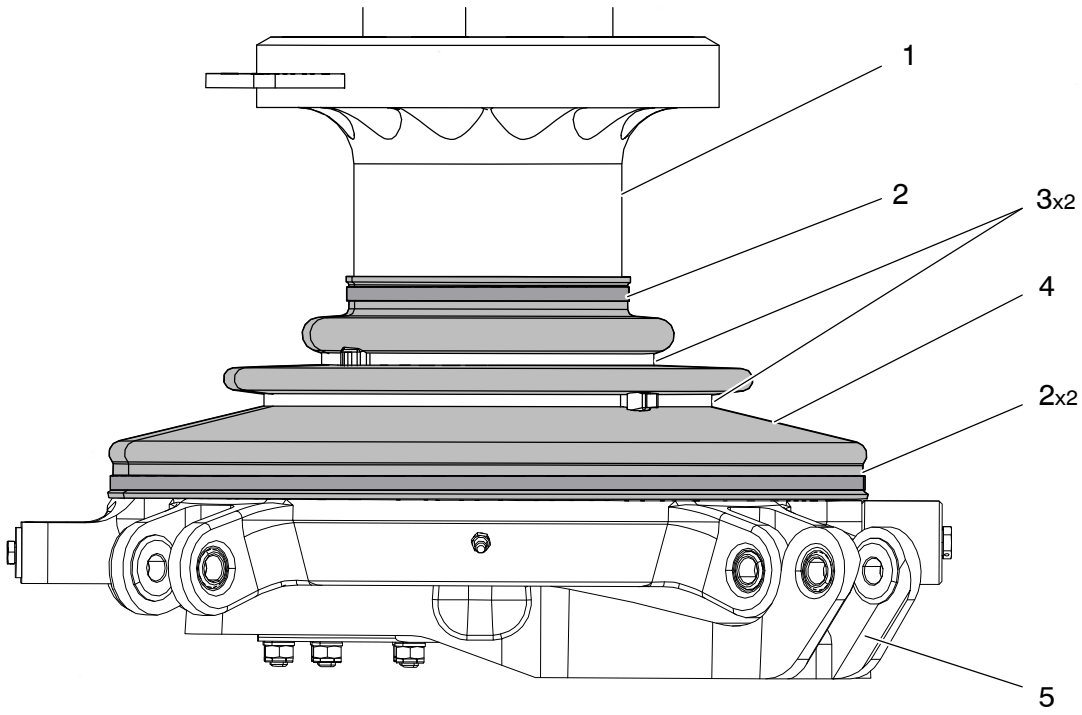

1 Hub-shaft
2 Cable tie or clamp
3 Cable tie
4 Swashplate bellows
5 Swashplate

Figure 1

EFFECTIVITY Helicopters with swashplate bellows P/N B623M20X2240.

(d) Remove the cable ties (2, Fig. 2), cable ties (3) and cable ties (5) from the swashplate bellows (4).

(e) Remove the swashplate bellows (4, Fig. 2) from the swashplate (6) and from the hub-shaft (1).

(f) Discard the swashplate bellows (4, Fig. 2).

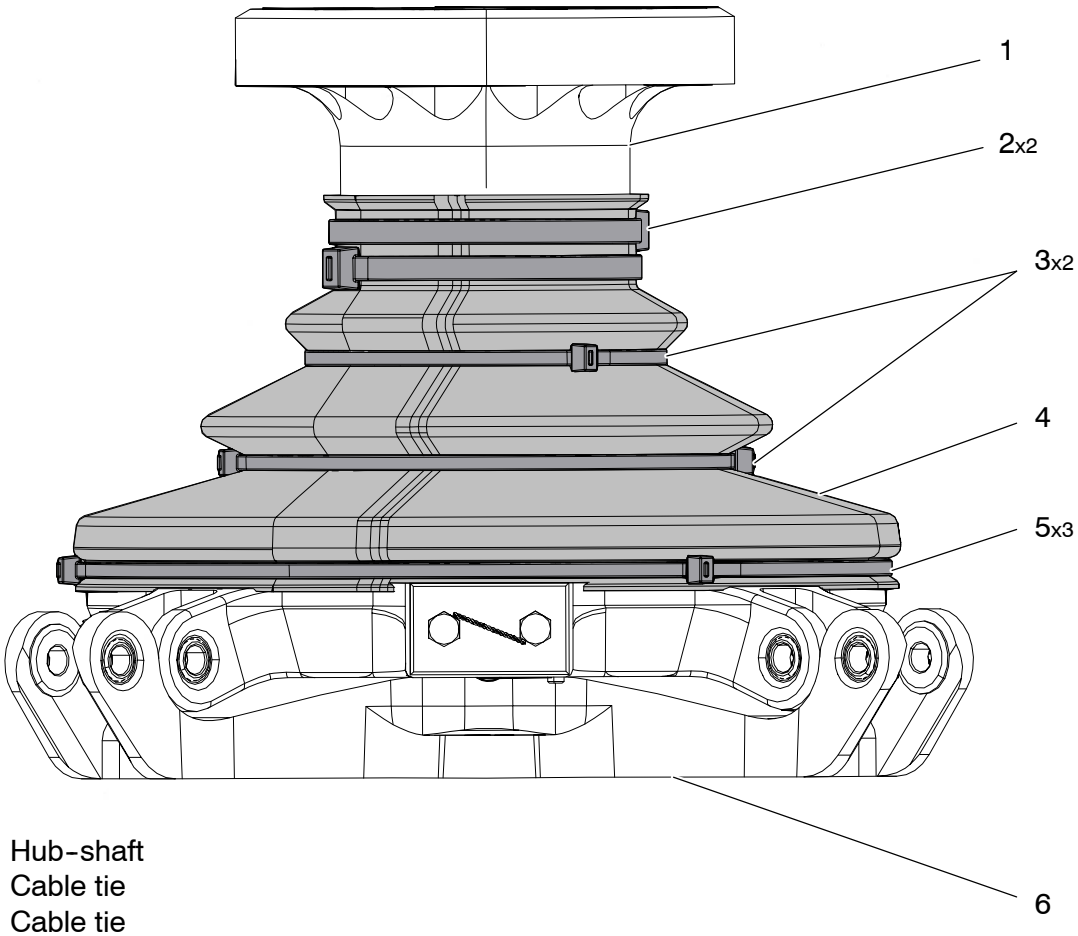

1 Hub-shaft
2 Cable tie
3 Cable tie
4 Swashplate bellows
5 Cable tie
6 Swashplate

Figure 2

This document is available on the internet: www.airbushelicopters.com/techpub/

EFFECTIVITY All helicopters.

(g) Take pictures of all inspected parts that follow. Archive the pictures with the log card of the main transmission.

NOTE Use a flashlight and a mirror for the inspection.

(h) Do the inspection of the support tube (11, Fig. 5) as follows:

NOTE In order to inspect the surface of the support tube (11) use the collective lever to move the swashplate (2, Fig. 5) up and down.

1 Clean the support tube (11, Fig. 5).

2 Examine the support tube (11, Fig. 5) for scratches.

- If there are scratches, rework cylindrical area to a max. depth of 0.1 mm with polishing cloth #400. Reworked area must not exceed 10 mm in width, or 3 cm^2 in area. A minimum separation between any adjacent reworked areas must be 30 mm, and total reworked areas must not exceed 10 percent of the cylindrical area.

(i) Do the inspection of the clamp (9, Fig. 5) for corrosion, damage and correct installation:

1 Replace a corroded or damaged clamp (9, Fig. 5).

2 If necessary install the clamp (9, Fig. 5) correctly on the shield (10).

3 Apply a torque between 0.5 Nm and 0.7 Nm to the screw (8, Fig. 5).

(j) Do the inspection of the ball bearings (1, Fig. 5) as follows:

1 Visually inspect the ball bearings (1, Fig. 5) for corrosion.

2 If the ball bearings (1, Fig. 5) show corrosion, contact AHD customer support.

(k) Do the inspection of the area under the outer deflection ring (5, Fig. 5) as follows:

1 Remove the lockwires (3, Fig. 5) from the screws (4).

2 Remove the screws (4, Fig. 5).

3 Remove the outer deflection ring (5, Fig. 5).

4 If there are foreign objects, remove the foreign objects.

5 Remove dirt with a lint-free cloth.

6 Lubricate the swashplate bearing, refer to MM, 41-53.

7 Install the outer deflection ring (5, Fig. 5) with the screws (4).

8 Apply a torque between 4 Nm and 6 Nm to the screws (4, Fig. 5).

9 Safety the screws (4, Fig. 5) with new lockwire (CM 776) (3) , refer to MTC, 20-02-06-402.

3.B.2. Retrofit of the outer deflection ring

CAUTION

MAKE SURE NOT TO DAMAGE THE DRIVING LINK PARTS AND THE ROTOR MAST DURING THE REMOVAL OF THE OUTER DEFLECTION RING.

(a) Remove the lockwire (4, Fig. 3) from the hexagon head screws (3).

(b) Remove the twelve hexagon head screws (3, Fig. 3) from the swashplate (1). Store the hexagon head screws (3) for reuse.

CAUTION

MAKE SURE THAT NOT CHIPS FALL INTO THE SWASHPLATE OR ONTO BENEATH LYING COMPONENTS.

(c) Protect the swashplate (1, Fig. 3) with a cloth.

(d) Cut the outer deflection ring (2, Fig. 3) in two pieces using a metal snips or a suitable tool.

(e) Remove the outer deflection ring (2, Fig. 3) from the swashplate (1).

(f) Discard the outer deflection ring (2, Fig. 3).

1 Swashplate
2 Outer deflection ring
3 Hexagon head screw
4 Lockwire

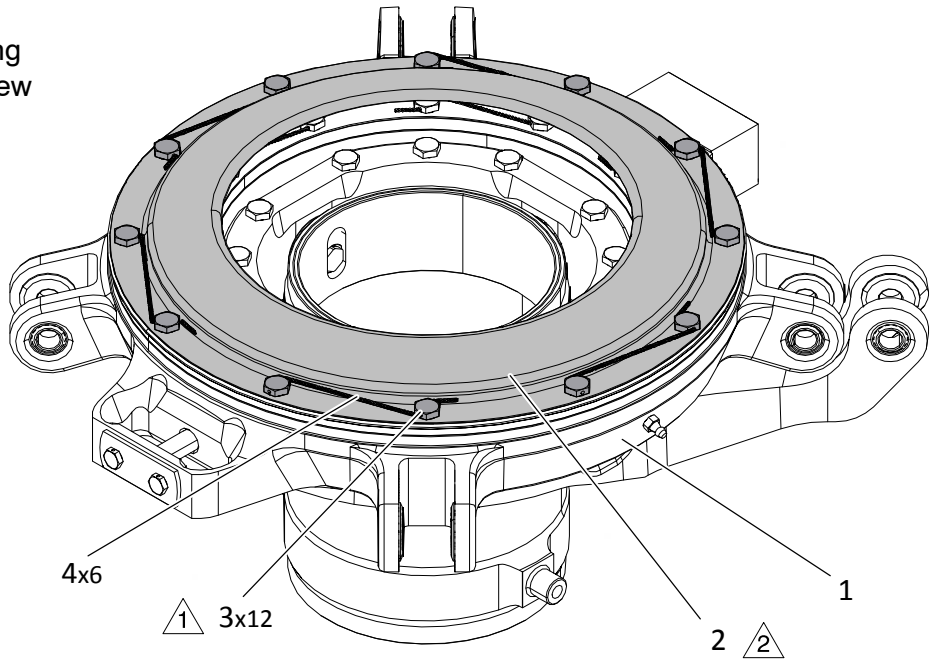

1 Store hexagon head screws for reuse.
2 The outer deflection ring must be cut in two pieces for the removal.

Figure 3

(g) If there are unwanted objects in the area where the old deflection ring was installed, remove the unwanted objects. Remove dirt with a lint-free cloth.

(h) Position both parts of the new outer deflection ring (2, Fig. 4) on the swashplate (1), refer to Fig. 4.

(i) Install both parts of the new outer deflection ring (2, Fig. 4) with twelve hexagon head screws (3). Torque the hexagon head screws (3) to 4-6 Nm (36-53 lbf.in).

(j) Secure the Hexagon head screws (3, Fig. 4) with lockwire (4) (CM 776).

EFFECTIVITY Swashplate P/N 117-41905.

(k) Write the P/N "117-41905-001" on the new name plate (5, Fig. 4) using a wiping resistant pen.

(l) Copy the S/N from the old name plate to the new name plate (5, Fig. 4) using a wiping resistant pen.

(m) Cross out the old P/N on the old name plate.

(n) Apply a layer of lacquer (CM 481) to the old name plate. Let lacquer dry i.a.w manufacturer's instruction.

(o) Install the new name plate (5, Fig. 4) close to the old name plate to the swashplate (1).

(p) Apply a layer of laquer (CM 481) to the new name plate (5, Fig. 4). Let laquer dry i.a.w manufacturer's instruction.

EFFECTIVITY Swashplate P/N 117-41904.

(q) Use a wiping resistant pen, identify the swashplate close to the name plate (5, Fig. 4) as follows: "ASB MBB-BK117-40A-115".

(r) Protect the identification with lacquer, single-layer (CM 421). Leave lacquer, single layer dry, refer to the manufacturer's instructions.

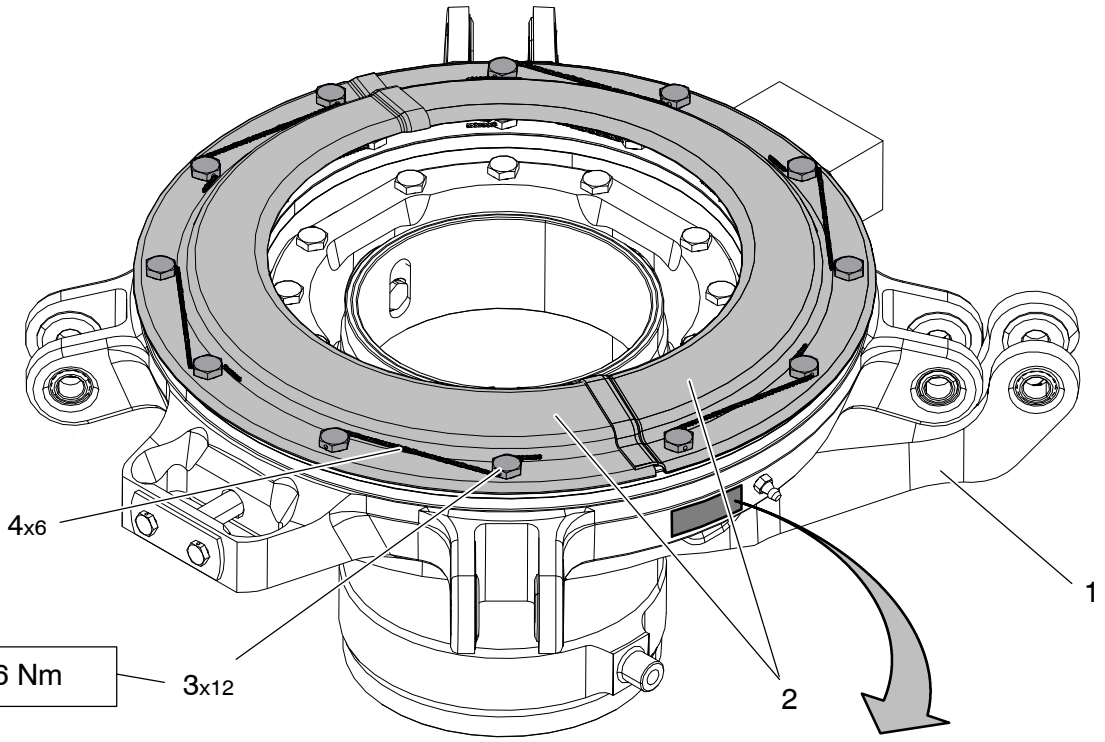

1	Swashplate		
2	Outer deflection ring	B623M2002210	
3	Hexagon head screw		
4	Lockwire	CM 776	
5	Name plate	MBBN3060E2AS	

Figure 4

3.B.3. Inspection of the Swashplate at 400 Fh

(a) Do the inspection of the swashplate bearing, refer to MM, 41-52.

(b) Lubricate the swashplate bearing, refer to MM, 41-53.

(c) Do the inspection of the area under the outer deflection ring (5, Fig. 5) as follows:

1 Remove the lockwires (3, Fig. 5) from the screws (4).

2 Remove the screws (4, Fig. 5).

3 Remove the outer deflection ring (5, Fig. 5).

4 If there are foreign objects, remove the foreign objects.

5 Remove dirt with a lint-free cloth.

6 Install the outer deflection ring (5, Fig. 5) with the screws (4).

7 Apply a torque between 4 Nm and 6 Nm to the screws (4, Fig. 5).

8 Safety the screws (4, Fig. 5) with new lockwire (CM 776) (3), refer to MTC, 20-02-06-402.

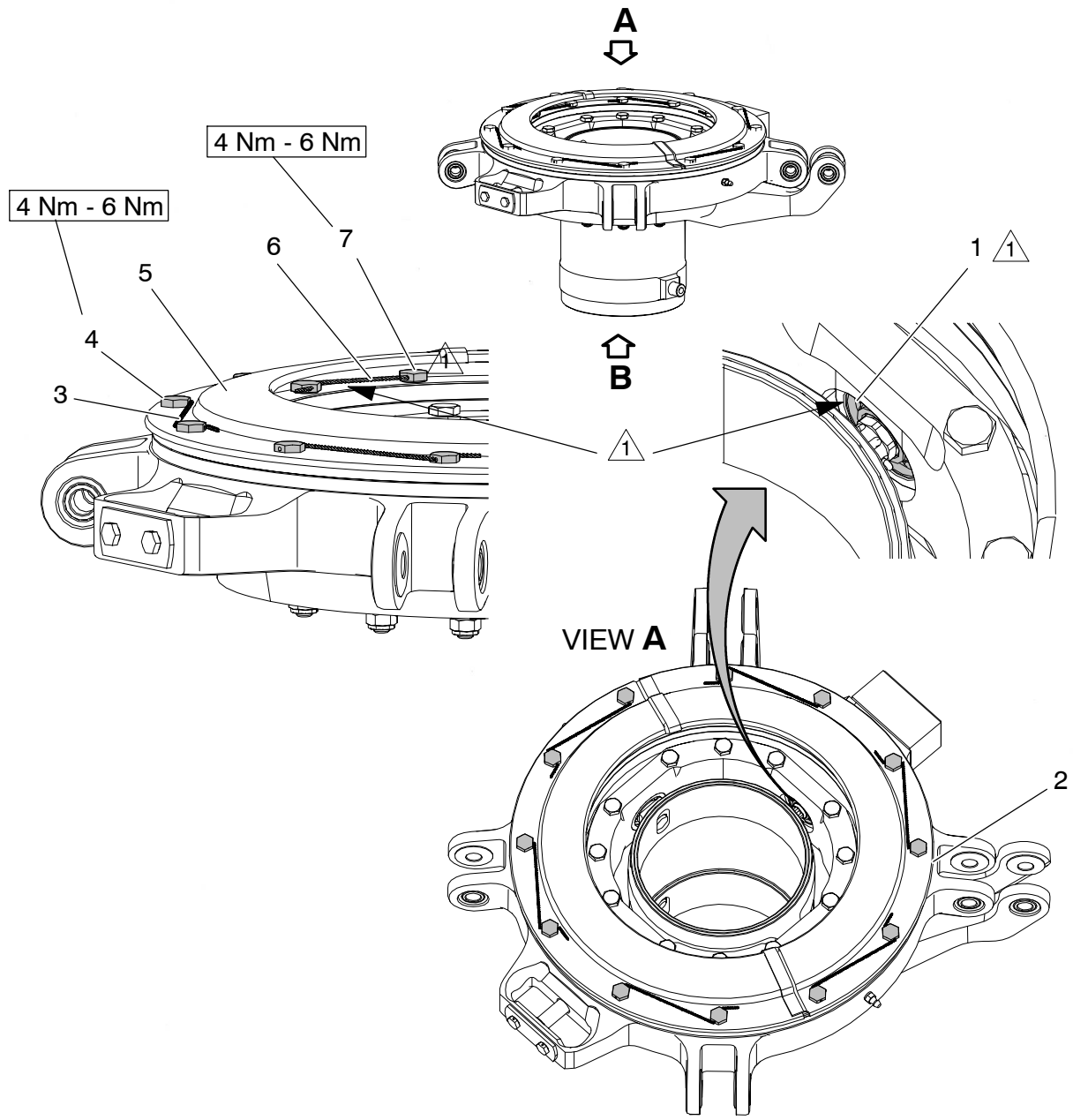

1 Ball bearing
2 Swashplate
3 Lockwire (CM 776)
4 Screw
5 Outer deflection ring
6 Lockwire (CM 776)
7 Screw
8 Screw
9 Clamp
10 Shield
11 Support tube

MBB100-W3-5

1 Visually inspect.

Inspection of the Swashplate
Figure 5 (Sheet 1 of 2)

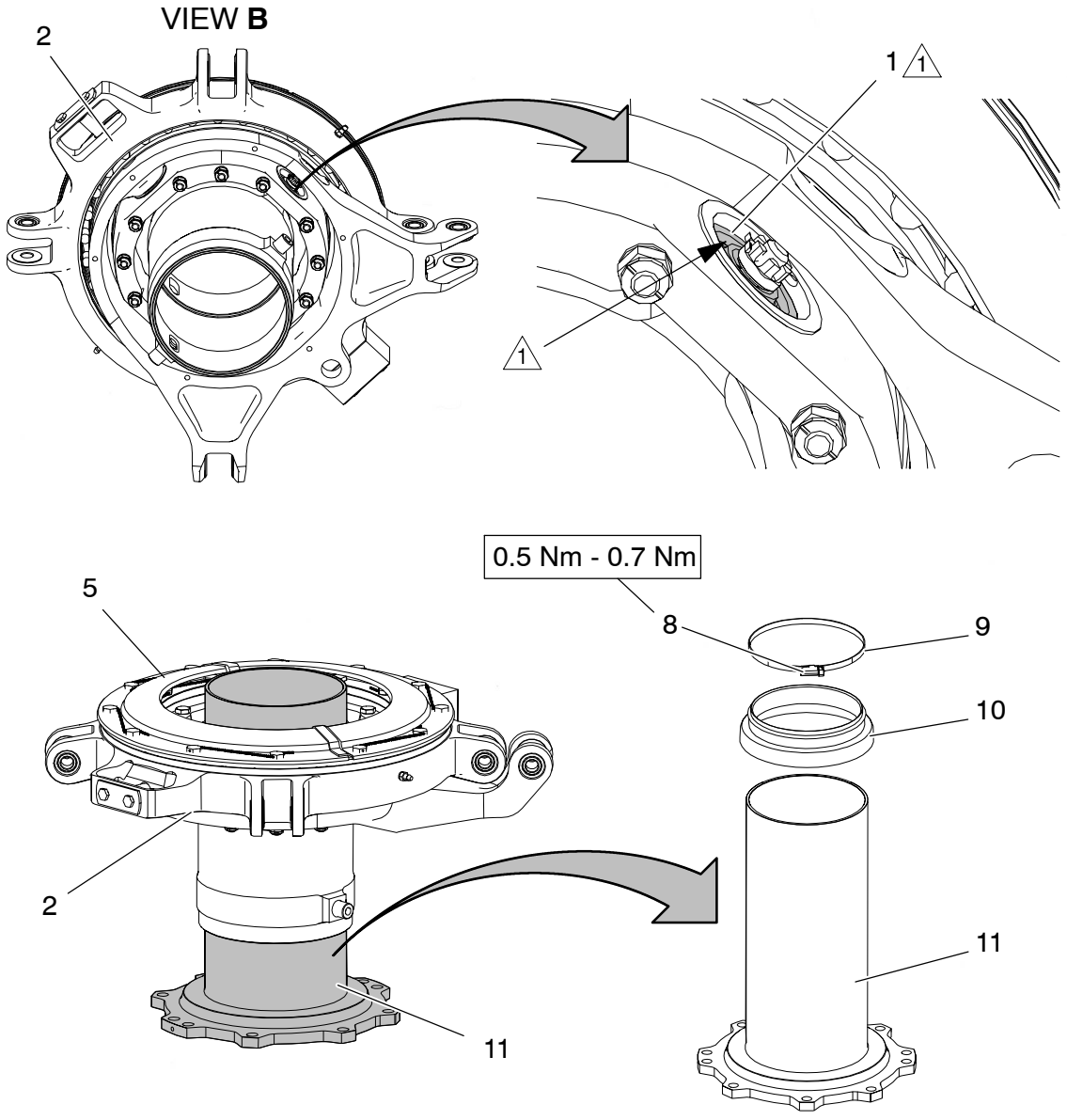

1 Ball bearing
2 Swashplate
3 Lockwire (CM 776)
4 Screw
5 Outer deflection ring
6 Lockwire (CM 776)
7 Screw
8 Screw
9 Clamp MBB100-W3-5
10 Shield
11 Support tube

1 Visually inspect.

Inspection of the Swashplate
Figure 5 (Sheet 2 of 2)

3.C. IDENTIFICATION

Identification of this document:

Confirm accomplishment of this ASB by an entry in the historical record of the helicopter.

Confirm accomplishment of this ASB by an entry in the Flight Manual (ROIV) section "RECORD OF SERVICE- AND ALERT SERVICE BULLETINS".

Tracking of modifications in the documentation:

Confirm accomplishment of this ASB by an entry in the log card of the swashplate.

Identification of modifications on equipment or parts:

Keyword	Old P/N	New P/N	MOD	Marking Type
Swashplate	117-41904	-	ASB MBB-BK117-40A-115	Wiping resistant pen
Swashplate	117-41905	117-41905-001	-	New name plate

3.D. OPERATING AND MAINTENANCE INSTRUCTIONS

Flight Manual (FLM):

Not applicable.

Aircraft Maintenance Manual (MM):

Bis zur Aufnahme in das WAH BO105 muss die wiederkehrende Inspektion der Taumelscheibe alle 400 FH (+ 40 FH Toleranz) durchgeführt werden gemäß Abschnitt 3.B.3.

4. APPENDIX

Not applicable.