ALERT

Number: **737-27A1314 RB**
Original Issue: March 17, 2020
Revision 2: July 06, 2021
ATA System: 2721 2511

SUBJECT: FLIGHT CONTROLS - Rudder and Rudder Trim Control System - Rudder Pedal Shroud Assemblies and Upper Cover Assemblies Change

THIS DOCUMENT IS SENT TO THE OPERATORS OF RECORD OF THE AIRPLANES SHOWN IN PARAGRAPH 1.A., EFFECTIVITY. IF AN AIRPLANE HAS BEEN LEASED OR SOLD, SEND THIS DOCUMENT TO THE NEW OPERATOR. IF APPLICABLE SPARES HAVE BEEN SOLD, SEND THIS DOCUMENT TO THE NEW OWNER. THIS IS AN ENHANCED REQUIRED FOR COMPLIANCE DOCUMENT. THE BOEING PROCESSES USED TO CREATE THE SERVICE BULLETIN (SB) AND THE REQUIREMENTS BULLETIN (RB) ENSURE THAT THE INFORMATION BETWEEN "RC START" AND "RC END" IN THE SB ARE IDENTICAL TO THE INFORMATION IN THE SAME SECTIONS (COMPLIANCE, WORK INSTRUCTIONS…) OF THE RB WHICH THE SB REFERS TO AS THE RELATED DOCUMENT.

1. Effectivity

A. Airplanes

This bulletin is applicable to 737-600, 737-700, 737-700C, 737-800, 737-900, 737-900ER Airplane(s), line number(s) 1-2598, 2600-2721, 2723-2813, 2815-2930, 2932-3068, 3070-3323, 3325-3425, 3427-3521, 3523-3611, 3613-3701, 3703-3791, 3793-3878, 3880-3915, 3917-3968, 3970-4013, 4015-4054, 4056-4098, 4100-4140, 4142-4180, 4182-4218, 4220-4255, 4257-4293, 4295-4330, 4332-4365, 4367-4398, 4400-4444, 4446-4480, 4482-4546, 4548-4608, 4610-4672, 4674-4727, 4729-4767, 4769-4812, 4814-4858, 4860-4897, 4899-4937, 4939-4977, 4979-5019, 5021-5057, 5059-5097, 5099-5137, 5139-5177, 5179-5217, 5219-5261, 5263-5297, 5299-5337, 5339-5367, 5369-5397, 5399-5427, 5429-5457, 5459-5477, 5479-5509, 5511-5541, 5543-5566, 5568-5586, 5588-5601, 5603-5622, 5624-5655, 5657-5667, 5669-5679, 5681-5711, 5713-5727, 5729-5739, 5741-5764, 5766-5787, 5789-5795, 5797-5822, 5824-5850, 5853-5879, 5881-5901, 5904-5935, 5937-5947, 5949-5962, 5964-5991, 5994-6019, 6021-6033, 6035-6047, 6049-6073, 6075, 6077-6103, 6105-6113, 6115-6131, 6133-6153, 6155-6159, 6161-6187, 6190-6215, 6217-6221, 6223-6243, 6245-6249, 6251-6271, 6274-6289, 6291-6299, 6301-6307, 6309-6325, 6327, 6329-6343, 6345-6355, 6357-6359, 6361-6371, 6373-6383, 6386-6395, 6397-6407, 6409-6411, 6413-6419, 6421-6429, 6431-6439, 6442-6447, 6449-6455, 6457-6463, 6465-6467, 6469-6471, 6473-6480, 6482-6489, 6491, 6493-6498, 6500-6507, 6509-6514, 6516-6520, 6522-6527, 6529-6531, 6533-6534, 6536-6541, 6543-6547, 6549-6554, 6556-6559, 6561, 6563-6568, 6570-6574, 6576-6581, 6583-6588, 6590-6593, 6596-6597, 6599-6602, 6604-6606, 6608-6611, 6613-6615, 6617-6620, 6622, 6624, 6626-6629, 6631-6633, 6635-6638, 6640-6642, 6644-6647, 6649-6651, 6653-6656, 6659-6660, 6662-6665, 6667-6671, 6673-6676, 6678-6680, 6682-6685, 6688-6689, 6691-6694, 6696-6698, 6700-6703, 6705-6707, 6709-6712, 6714-6716, 6718-6719, 6721, 6723-6725, 6727-6730, 6732-6734, 6736-6739, 6741-6743, 6745-6748, 6751-6752, 6754-6757, 6759-6761, 6763-6766, 6768-6770, 6772-6775, 6777-6779, 6781-6782, 6786-6788, 6790-6791, 6793, 6795, 6797, 6799-6802, 6804, 6806, 6808-6809, 6811, 6813, 6815, 6817-6818, 6820, 6822-6824, 6826-6827, 6829, 6831-6833, 6835-6836, 6838, 6840, 6842,

Export Controlled ECCN: 9E991
Copyright © Unpublished
Work - See page 1 for details.

6844-6845, 6847, 6849, 6851, 6853-6854, 6856-6858, 6860, 6862-6863, 6865, 6867, 6869-6871, 6873-6874, 6878-6880, 6882-6883, 6885, 6887-6889, 6891-6892, 6894, 6896, 6898, 6900-6903, 6905, 6907, 6910, 6912-6914, 6916, 6918-6919, 6921, 6923-6925, 6927-6928, 6930, 6932-6934, 6936-6937, 6939, 6943, 6945-6948, 6950, 6952, 6954-6955, 6957-6959, 6961-6962, 6964, 6966-6967, 6969, 6971-6972, 6977, 6979, 6981-6982, 6984, 6986-6987, 6989, 6992, 6994, 6996-6997, 6999, 7001-7002, 7007, 7009, 7011-7012, 7014, 7016-7017, 7019, 7021-7022, 7024, 7026, 7029, 7031-7032, 7034, 7036-7037, 7039, 7041, 7046-7047, 7049, 7051-7052, 7054, 7056-7057, 7059, 7061, 7063, 7066-7067, 7069, 7071-7072, 7076, 7078, 7081-7082, 7084, 7086-7087, 7089, 7091-7092, 7094, 7097, 7099, 7101-7102, 7104, 7106-7107, 7109, 7112, 7116-7117, 7119, 7121-7122, 7124, 7126-7127, 7129, 7131, 7134, 7136-7137, 7139, 7141-7142, 7146, 7149, 7151-7152, 7154, 7156-7157, 7159, 7161-7162, 7164, 7167, 7169, 7171-7172, 7174, 7176-7177, 7179, 7182, 7187, 7189, 7191, 7194, 7197, 7199, 7202, 7204, 7206, 7209, 7212, 7214, 7217, 7221, 7224, 7227, 7229, 7232, 7234-7235, 7239, 7242, 7244, 7247, 7249, 7251, 7257, 7259, 7262, 7264, 7266, 7269, 7272, 7274, 7277, 7279-7280, 7284, 7287, 7292, 7294, 7297, 7299, 7302, 7304, 7307, 7309, 7312, 7314, 7317, 7319, 7322, 7327, 7329, 7332, 7334, 7337, 7339, 7342, 7344, 7347, 7349, 7352, 7354, 7357, 7362, 7364, 7367, 7369, 7372, 7374, 7377, 7379, 7382, 7387, 7397, 7402, 7407, 7412, 7417, 7422, 7432, 7437, 7442, 7447, 7452, 7457, 7467, 7472, 7477, 7482, 7487, 7492, 7502, 7507, 7512, 7517, 7522, 7527, 7537, 7547, 7552, 7557, 7562, 7572, 7577, 7582, 7587, 7592, 7597, 8592 in 1 Group(s). Where the effectivity is presented with hyphens between line numbers, the airplane applicability means "through" and "inclusive", e.g. line numbers 1-9 means line numbers 1 through 9 inclusive.

The Variable Numbers and Group Information for the applicable airplanes is given below.

NOTE: The Variable Number table below includes all affected airplanes up to Line Number 8592. Affected airplanes after Line Number 8592 will be added to the service bulletin's MyBoeingFleet.com (MBF) "get effectivity" result when they are added to the MBF Fleet Profile Page.

GROUP	CONFIGURATION	DESCRIPTION
1	-	737-600/-700/-700C/-800/-900/-900ER Airplanes that it is necessary to have their rudder pedal shroud assemblies and upper cover assemblies changed.

Airplane Models:

737-600, 737-700, 737-700C, 737-800, 737-900, 737-900ER

Variable Number	Group
YA001 - YA099	1
YA101 - YA199	1
YA201 - YA211	1
YA221	1
YA231 - YA242	1
YA251 - YA256	1

Variable Number	Group
YA271 - YA272	1
YA291	1
YA301 - YA302	1
YA311 - YA314	1
YA321 - YA323	1
YA336 - YA345	1

Variable Number	Group
YA351	1
YA356 - YA357	1
YA366 - YA367	1
YA371 - YA377	1
YA501 - YA536	1
YA541 - YA552	1

Export Controlled ECCN: 9E991
Copyright © Unpublished
Work - See page 1 for details.

ALERT **ALERT**

Variable Number	Group
YA571 - YA578	1
YA601 - YA615	1
YA621 - YA622	1
YA626 - YA631	1
YA635 - YA636	1
YA641 - YA642	1
YA645 - YA650	1
YA656 - YA659	1
YA666 - YA667	1
YA671 - YA672	1
YA681 - YA691	1
YA701 - YA710	1
YA721 - YA722	1
YA731 - YA734	1
YA751 - YA756	1
YA801 - YA803	1
YA809	1
YA811 - YA814	1
YA831 - YA835	1
YA841 - YA862	1
YA881 - YA882	1
YA891 - YA892	1
YA961 - YA978	1
YB001 - YB006	1
YB101 - YB132	1
YB151 - YB153	1
YB156 - YB158	1
YB161 - YB164	1
YB171 - YB172	1
YB181 - YB184	1
YB201 - YB208	1
YB271	1
YB276	1

Variable Number	Group
YB301 - YB310	1
YB371 - YB392	1
YB501 - YB502	1
YB521 - YB526	1
YB541 - YB544	1
YB551	1
YB561 - YB598	1
YB601 - YB636	1
YB651	1
YB656	1
YB671 - YB672	1
YB851 - YB863	1
YB871 - YB874	1
YB881 - YB893	1
YB901 - YB903	1
YB911	1
YB961 - YB975	1
YB981	1
YB986 - YB998	1
YC001 - YC030	1
YC051 - YC084	1
YC091 - YC095	1
YC101 - YC104	1
YC111 - YC113	1
YC121	1
YC126 - YC127	1
YC136 - YC141	1
YC146 - YC147	1
YC151 - YC156	1
YC166 - YC171	1
YC176 - YC179	1
YC186 - YC190	1
YC201 - YC203	1

Variable Number	Group
YC206 - YC207	1
YC301 - YC305	1
YC321 - YC387	1
YC391 - YC394	1
YC396	1
YC401 - YC417	1
YC421 - YC422	1
YC426 - YC428	1
YC436 - YC439	1
YC441 - YC448	1
YC451 - YC455	1
YC459	1
YC461 - YC467	1
YC471 - YC499	1
YC501 - YC526	1
YC571 - YC583	1
YC587 - YC589	1
YC591 - YC593	1
YC601 - YC655	1
YC681 - YC696	1
YC701 - YC715	1
YC720 - YC725	1
YC727 - YC752	1
YC761 - YC770	1
YC781 - YC793	1
YC801 - YC892	1
YC901 - YC907	1
YC921 - YC922	1
YC931 - YC932	1
YC941 - YC951	1
YC971 - YC978	1
YC981 - YC983	1
YD001 - YD007	1

Export Controlled ECCN: 9E991
Copyright © Unpublished
Work - See page 1 for details.

Variable Number	Group
YD021 - YD025	1
YD041 - YD057	1
YD081 - YD084	1
YD101 - YD117	1
YD121 - YD126	1
YD151 - YD159	1
YD171 - YD172	1
YD201 - YD203	1
YD206 - YD209	1
YD216 - YD219	1
YD251 - YD254	1
YD256 - YD257	1
YD261	1
YD301 - YD334	1
YD391	1
YD401 - YD410	1
YD412 - YD424	1
YD481 - YD485	1
YD491 - YD499	1
YD501 - YD512	1
YD531 - YD535	1
YD541 - YD547	1
YD561 - YD564	1
YD571 - YD572	1
YD591 - YD595	1
YD601 - YD612	1
YD651 - YD655	1
YE001 - YE020	1
YE051	1
YE101 - YE109	1
YE151 - YE157	1
YE171 - YE172	1
YE201 - YE206	1

Variable Number	Group
YE301 - YE305	1
YE321 - YE326	1
YE371 - YE383	1
YF001 - YF011	1
YF021 - YF049	1
YF051 - YF080	1
YF086 - YF087	1
YF106 - YF107	1
YF111 - YF114	1
YF116 - YF119	1
YF121 - YF132	1
YF176 - YF178	1
YF191 - YF192	1
YF201 - YF276	1
YF401 - YF402	1
YF431 - YF432	1
YF436 - YF437	1
YF441 - YF442	1
YF451 - YF460	1
YF501 - YF599	1
YF601 - YF685	1
YF691 - YF695	1
YF701 - YF707	1
YF801 - YF805	1
YF831 - YF832	1
YF836 - YF838	1
YF871 - YF872	1
YF901 - YF905	1
YF921 - YF928	1
YF951 - YF954	1
YG001 - YG044	1
YG061 - YG064	1
YG066 - YG089	1

Variable Number	Group
YG091 - YG099	1
YG101 - YG104	1
YG111 - YG114	1
YG116 - YG148	1
YG201 - YG205	1
YG211 - YG214	1
YG221 - YG224	1
YG251 - YG252	1
YG501 - YG517	1
YG601 - YG602	1
YG701	1
YG711	1
YG721 - YG722	1
YH001 - YH012	1
YH031 - YH055	1
YH071 - YH080	1
YH101 - YH132	1
YH201 - YH202	1
YH206 - YH207	1
YH301 - YH307	1
YH321 - YH322	1
YH501 - YH542	1
YH551 - YH594	1
YH601 - YH606	1
YH611 - YH620	1
YH631 - YH632	1
YH636 - YH637	1
YH641	1
YH681 - YH686	1
YH701 - YH755	1
YH801 - YH899	1
YH901 - YH908	1
YH911 - YH915	1

Export Controlled ECCN: 9E991
Copyright © Unpublished
Work - See page 1 for details.

ALERT **ALERT**

Variable Number	Group
YH951 - YH952	1
YJ001 - YJ013	1
YJ021	1
YJ471 - YJ480	1
YJ501 - YJ517	1
YJ531 - YJ579	1
YJ591 - YJ599	1
YJ631 - YJ632	1
YJ671 - YJ694	1
YJ801 - YJ867	1
YJ871 - YJ880	1
YJ901 - YJ904	1
YJ908 - YJ929	1
YJ931 - YJ937	1
YJ941 - YJ956	1
YJ961	1
YJ976 - YJ977	1
YK001 - YK007	1
YK101 - YK104	1
YK111 - YK112	1
YK121 - YK122	1
YK131 - YK133	1
YK136 - YK139	1
YK141 - YK142	1
YK146 - YK148	1
YK151 - YK154	1
YK161 - YK167	1
YK171	1
YK176 - YK177	1
YK186	1
YK191	1
YK196	1
YK201 - YK202	1

Variable Number	Group
YK301 - YK314	1
YK321 - YK340	1
YK361 - YK378	1
YK401 - YK406	1
YK426 - YK427	1
YK431 - YK450	1
YK456 - YK467	1
YK471 - YK473	1
YK476	1
YK478	1
YK480 - YK487	1
YK491 - YK493	1
YK495 - YK499	1
YK511 - YK516	1
YK521 - YK530	1
YK551 - YK571	1
YK576 - YK577	1
YK580 - YK585	1
YK601 - YK602	1
YK606 - YK607	1
YK611 - YK616	1
YK621 - YK634	1
YK641 - YK644	1
YK651 - YK665	1
YK671 - YK672	1
YK676 - YK677	1
YK681 - YK686	1
YK691	1
YK695 - YK699	1
YK701 - YK713	1
YK716 - YK719	1
YK721 - YK741	1
YK751 - YK770	1

Variable Number	Group
YK776 - YK778	1
YK781 - YK785	1
YK791 - YK792	1
YK796 - YK797	1
YK801 - YK899	1
YK901 - YK912	1
YK918 - YK919	1
YK921 - YK929	1
YK941 - YK999	1
YL001 - YL005	1
YL011 - YL016	1
YL021 - YL024	1
YL051 - YL052	1
YL056 - YL057	1
YL061	1
YL066 - YL069	1
YL076 - YL077	1
YL101 - YL137	1
YL201 - YL237	1
YL241 - YL242	1
YL271 - YL272	1
YL281 - YL284	1
YL301 - YL303	1
YL311 - YL314	1
YL316 - YL321	1
YL351 - YL353	1
YL371 - YL374	1
YL401	1
YL421 - YL429	1
YL431 - YL444	1
YL461 - YL478	1
YL501 - YL509	1
YL531 - YL534	1

Export Controlled ECCN: 9E991
Copyright © Unpublished
Work - See page 1 for details.

Variable Number	Group
YL541 - YL551	1
YL561 - YL579	1
YL591 - YL598	1
YL601 - YL606	1
YL611 - YL612	1
YL616 - YL617	1
YL621	1
YL626	1
YL631 - YL634	1
YL636 - YL637	1
YL661 - YL664	1
YL676 - YL691	1
YL696 - YL697	1
YL701 - YL707	1
YL731	1
YL751 - YL752	1
YL756 - YL757	1
YL761 - YL780	1
YL796 - YL797	1
YL801 - YL815	1
YL901 - YL910	1
YL921 - YL940	1
YL951 - YL968	1
YM101 - YM103	1
YM201 - YM244	1
YM251 - YM299	1
YM301 - YM399	1
YM401 - YM415	1
YM471	1
YM481 - YM484	1
YM501 - YM515	1
YM521 - YM522	1
YM541	1

Variable Number	Group
YM551 - YM553	1
YM571 - YM572	1
YM581 - YM582	1
YM591 - YM599	1
YM631 - YM634	1
YM641 - YM652	1
YM671 - YM674	1
YM691 - YM699	1
YM701 - YM710	1
YM761 - YM765	1
YM771 - YM779	1
YN001 - YN016	1
YN021 - YN024	1
YN061	1
YN071 - YN082	1
YN091 - YN092	1
YN101 - YN112	1
YN121	1
YN126	1
YN201 - YN202	1
YN211 - YN219	1
YN231 - YN236	1
YN261	1
YN501	1
YN531 - YN534	1
YN551 - YN566	1
YN581 - YN585	1
YN591 - YN593	1
YN601 - YN606	1
YN651 - YN653	1
YN661 - YN663	1
YN666 - YN667	1
YN671 - YN674	1

Variable Number	Group
YN701 - YN702	1
YN741 - YN746	1
YN756 - YN758	1
YQ001 - YQ003	1
YQ011 - YQ021	1
YQ026 - YQ029	1
YQ036 - YQ045	1
YQ201 - YQ207	1
YQ231	1
YQ241 - YQ251	1
YQ281 - YQ284	1
YQ291 - YQ296	1
YQ301 - YQ302	1
YQ321 - YQ324	1
YQ331 - YQ334	1
YQ346 - YQ347	1
YQ351 - YQ367	1
YQ371	1
YQ401 - YQ403	1
YQ451 - YQ454	1
YQ456	1
YQ461	1
YQ471	1
YQ501 - YQ520	1
YQ601 - YQ606	1
YQ610 - YQ614	1
YR001 - YR098	1
YR101 - YR105	1
YR111 - YR124	1
YR126 - YR144	1
YR166 - YR182	1
YR186 - YR198	1
YR201 - YR215	1

Export Controlled ECCN: 9E991
Copyright © Unpublished
Work - See page 1 for details.

ALERT **ALERT**

Variable Number	Group
YR231 - YR294	1
YR296 - YR297	1
YR301 - YR334	1
YR338 - YR341	1
YR361 - YR366	1
YR371 - YR373	1
YR376 - YR377	1
YR381 - YR382	1
YR386 - YR388	1
YR391	1
YR396 - YR399	1
YR401 - YR405	1
YR411 - YR413	1
YR416 - YR418	1
YR421 - YR424	1
YR426 - YR455	1
YR457 - YR499	1
YR501 - YR506	1
YR511 - YR520	1
YR526 - YR544	1
YR546 - YR551	1
YR556 - YR562	1
YR571 - YR582	1
YR591 - YR592	1
YR601 - YR605	1
YR616 - YR658	1
YR661 - YR663	1
YR671 - YR673	1
YR676 - YR678	1
YR681 - YR682	1
YR701 - YR769	1
YR771 - YR799	1
YR801 - YR827	1

Variable Number	Group
YR831 - YR838	1
YR841 - YR899	1
YR901 - YR903	1
YR931 - YR934	1
YR938 - YR944	1
YR951 - YR998	1
YS001 - YS002	1
YS006 - YS009	1
YS031 - YS032	1
YS051 - YS073	1
YS101 - YS120	1
YS126 - YS142	1
YS146 - YS160	1
YS166 - YS194	1
YS196 - YS197	1
YS201 - YS209	1
YS221 - YS225	1
YS231 - YS236	1
YS271 - YS288	1
YS295 - YS296	1
YS301 - YS348	1
YS351 - YS378	1
YS381 - YS386	1
YS393 - YS395	1
YS401	1
YS451	1
YS456 - YS457	1
YS462 - YS465	1
YS467	1
YS501 - YS502	1
YS506	1
YS511 - YS518	1
YS531	1

Variable Number	Group
YS536 - YS538	1
YS541 - YS542	1
YS546	1
YS551 - YS556	1
YS561 - YS578	1
YS581 - YS595	1
YS601 - YS690	1
YS701 - YS716	1
YS721 - YS762	1
YS771 - YS780	1
YS806 - YS810	1
YS816 - YS818	1
YS823 - YS825	1
YS851 - YS863	1
YS876	1
YS881 - YS884	1
YS891 - YS894	1
YS896 - YS897	1
YS901 - YS909	1
YS911 - YS957	1
YS961 - YS974	1
YS976 - YS977	1
YS981 - YS987	1
YS991 - YS998	1
YT001 - YT004	1
YT006	1
YT026 - YT027	1
YT031 - YT032	1
YT036 - YT038	1
YT061 - YT068	1
YT101 - YT138	1
YT176 - YT185	1
YT191	1

Export Controlled ECCN: 9E991
Copyright © Unpublished
Work - See page 1 for details.

Variable Number	Group
YT196 - YT199	1
YT201	1
YT206 - YT207	1
YT211 - YT213	1
YT251 - YT299	1
YT301 - YT307	1
YT311 - YT312	1
YT321 - YT355	1
YT371 - YT372	1
YT381	1
YT391 - YT396	1
YT401 - YT403	1
YT411 - YT417	1
YT427	1
YT461 - YT477	1
YT491 - YT492	1
YT501 - YT521	1
YT551 - YT552	1
YT556 - YT563	1
YT565	1
YT571 - YT578	1
YT601 - YT606	1
YT701 - YT708	1
YT723 - YT726	1
YT761 - YT781	1
YT791 - YT794	1
YT796 - YT797	1
YT801 - YT804	1
YT811 - YT813	1
YT826 - YT827	1
YT831 - YT832	1
YT841 - YT852	1
YT856 - YT863	1

Variable Number	Group
YT885 - YT887	1
YT891 - YT895	1
YT901 - YT998	1
YU001 - YU060	1
YU201 - YU218	1
YU301 - YU329	1
YU901 - YU931	1
YV001 - YV012	1
YV021 - YV023	1
YV030 - YV034	1
YV037 - YV042	1
YV045 - YV047	1
YV051 - YV059	1
YV081	1
YV083 - YV084	1
YV097 - YV099	1
YV101 - YV154	1
YV201 - YV203	1
YV251 - YV252	1
YV256 - YV257	1
YV301 - YV312	1
YV351 - YV368	1
YV381 - YV388	1
YV391 - YV394	1
YV401	1
YV411 - YV413	1
YV431 - YV433	1
YV441 - YV454	1
YV461 - YV464	1
YV467 - YV470	1
YV501 - YV512	1
YV521	1
YV571 - YV586	1

Variable Number	Group
YV596	1
YV601 - YV605	1
YV651 - YV674	1
YV676	1
YV695 - YV696	1
YV701 - YV702	1
YV711	1
YV722 - YV731	1
YV741 - YV794	1
YV801 - YV820	1
YV831 - YV848	1
YV881 - YV883	1
YV901 - YV915	1
YV923 - YV926	1
YV971 - YV983	1
YW001	1
YW011 - YW099	1
YW101 - YW164	1
YW201 - YW212	1
YW226 - YW240	1
YW245 - YW261	1
YW263	1
YW267 - YW281	1
YW283 - YW285	1
YW292 - YW299	1
YW351	1
YW356 - YW358	1
YW361 - YW366	1
YW371 - YW399	1
YW401 - YW430	1
YW441 - YW445	1
YW451 - YW452	1
YW471 - YW472	1

Export Controlled ECCN: 9E991
Copyright © Unpublished
Work - See page 1 for details.

ALERT **ALERT**

Variable Number	Group
YW491 - YW498	1
YW531 - YW536	1
YW541 - YW545	1
YW551 - YW580	1
YW585 - YW591	1
YW595 - YW596	1
YW601	1
YW610 - YW613	1

Variable Number	Group
YW616 - YW623	1
YW666	1
YW696 - YW699	1
YW701 - YW715	1
YW726 - YW731	1
YW766 - YW775	1
YW801 - YW803	1
YW811 - YW813	1

Variable Number	Group
YW821	1
YW831	1
YW881	1
YW891 - YW893	1
YW906 - YW910	1
YW916 - YW918	1
YW921 - YW925	1
YW971 - YW976	1

B. Spares Affected
Examine your spares supply for the parts or components identified below. If any parts or components are found, refer to Accomplishment Instructions for the recommended action.

Part Number	Part Name
233A2319-1	SHROUD ASSY
233A2319-2	SHROUD ASSY
233A2319-3	SHROUD ASSY
233A2319-4	SHROUD ASSY
251A3122-1	UPPER COVER ASSY
251A3122-4	UPPER COVER ASSY
251A3122-5	UPPER COVER ASSY
251A3122-6	UPPER COVER ASSY
251A3122-8	UPPER COVER ASSY
251A3122-9	UPPER COVER ASSY
251A3122-11	UPPER COVER ASSY
251A3122-12	UPPER COVER ASSY

2. CONCURRENT REQUIREMENTS

None.

3. COMPLIANCE

Federal Aviation Administration (FAA) Notice of Proposed Rule Making NPRM AD-2020-01009-T, is related to this bulletin.

Accomplish the required actions, based on the applicable conditions in Table 1 and Table 2 in accordance with the Accomplishment Instructions.

Export Controlled ECCN: 9E991
Copyright © Unpublished
Work - See page 1 for details.

When more than one OPTION is given for a CONDITION, do only one of the OPTION numbers. When more than one ACTION is given for a CONDITION or an OPTION, do all of the ACTION numbers for that CONDITION or OPTION.

Table 1: Work Package 1: Captain's Rudder Pedal Shroud Assemblies and Upper Cover Assembly - Change

Condition	Action	Compliance Time	Repeat Interval (Not to Exceed)
All Airplanes	Remove the Captain's rudder pedal shroud assemblies and upper cover assembly.	Within 27 months after the original issue date of Requirements Bulletin 737-27A1314 RB.	-
	OPTION 1 (ACTION 1): Change the Captain's rudder pedal upper cover assembly.		
	OPTION 1 (ACTION 2): Change the Captain's rudder pedal shroud assemblies.		
	OPTION 1 (ACTION 3): Install the Captain's rudder pedal changed shroud assemblies and changed upper cover assembly.		
	OPTION 2 (ACTION 1): Change the Captain's rudder pedal shroud assemblies.		
	OPTION 2 (ACTION 2): Install the Captain's rudder pedal changed shroud assemblies and a new upper cover assembly.		

Export Controlled ECCN: 9E991
Copyright © Unpublished
Work - See page 1 for details.

Table 2: Work Package 2: First Officer's Rudder Pedal Shroud Assemblies and Upper Cover Assembly - Change

Condition	Action	Compliance Time	Repeat Interval (Not to Exceed)
All Airplanes	Remove the First Officer's rudder pedal shroud assemblies and upper cover assembly.	Within 27 months after the original issue date of Requirements Bulletin 737-27A1314 RB.	-
	OPTION 1 (ACTION 1): Change the First Officer's rudder pedal upper cover assembly.		
	OPTION 1 (ACTION 2): Change the First Officer's rudder pedal shroud assemblies.		
	OPTION 1 (ACTION 3): Install the First Officer's rudder pedal changed shroud assemblies and changed upper cover assembly.		
	OPTION 2 (ACTION 1): Change the First Officer's rudder pedal shroud assemblies.		
	OPTION 2 (ACTION 2): Install the First Officer's rudder pedal changed shroud assemblies and a new upper cover assembly.		

4. APPROVAL

NOTE: The approval statement that follows is valid for 737-700C airplanes.

This Requirements Bulletin was examined by the Federal Aviation Administration (FAA). The changes specified in this document comply with the applicable regulations and are FAA approved for the airplanes listed in the requirements bulletin effectivity. This document and its approval were based on the airplane in its original Boeing delivery configuration or as modified by other Boeing changes.

If an airplane has a non-Boeing modification or repair that affects a component or system also affected by this Requirements Bulletin, the operator is responsible for obtaining appropriate regulatory agency approval before incorporating this Requirements Bulletin.

NOTE: The approval statement that follows is valid for all affected airplanes, except 737-700C airplanes.

This Requirements Bulletin was examined by the Federal Aviation Administration (FAA). The changes specified in this document comply with the applicable regulations and are FAA approved, as well as European Union Aviation Safety Agency (EASA)/Joint Aviation Authorities (JAA) approved for all EASA/JAA approved airplanes listed in the requirements bulletin effectivity. This document and its approval were based on the airplane in its original Boeing delivery configuration or as modified by other Boeing changes.

Export Controlled ECCN: 9E991
Copyright © Unpublished
Work - See page 1 for details.

ALERT **ALERT**

If an airplane has a non-Boeing modification or repair that affects a component or system also affected by this Requirements Bulletin, the operator is responsible for obtaining appropriate regulatory agency approval before incorporating this Requirements Bulletin.

In addition, the Manager of the FAA Seattle ACO Branch approves accomplishment of the change defined in this requirements bulletin revision as an alternative method of compliance to accomplishing the requirements of paragraph (g) and (h) of AD 2017-14-13. All provisions of AD 2017-14-13 that are not specifically referenced in the above statement remain fully applicable and must be complied with accordingly

Export Controlled ECCN: 9E991
Copyright © Unpublished
Work - See page 1 for details.

5. ACCOMPLISHMENT INSTRUCTIONS

A. GENERAL INFORMATION

NOTE: 1. This is an Enhanced Required for Compliance document. There will be a separate Service Bulletin (SB) and a separate Requirements Bulletin (RB). If an RB is mandated by an Airworthiness Directive (AD), then all applicable requirements specified in the RB must be done. For the related SB, some locations are marked RC Start and RC End to identify the requirements that are restated from the RB. For the related SB, the areas between RC Start and RC End, including sub-steps and any figures identified between RC Start and RC End, must be done to comply with the AD. Therefore, an Alternative Method of Compliance (AMOC) is required for any deviations to steps between RC Start and RC End, including substeps and identified figures. For the related SB, the steps not between RC Start and RC End may be deviated from using accepted methods in accordance with the operator's maintenance or inspection program without obtaining approval of an AMOC; this is provided that the steps between RC Start and RC End, including sub-steps and identified figures, can still be done as specified, and the airplane can be put back in an airworthy condition. Figures not required for compliance are omitted from the RB.

2. This is an Enhanced Required for Compliance document. The Boeing processes used to create the Service Bulletin (SB) and the Requirements Bulletin (RB) ensure that the information between "RC Start" and "RC End" in the SB are identical to the information in the same sections (Compliance, Work Instructions...) of the RB which the SB refers to as the related document.

3. The compliance times for the actions in WORK INSTRUCTIONS are in Compliance.

4. Unless shown differently, these dimensions and tolerances are used:

- Linear dimensions are in inches
- Tolerance on linear dimensions, other than rivet and bolt edge margins, is plus or minus 0.03 inch
- Tolerance on rivet and bolt edge margin is plus or minus 0.05 inch
- Angular tolerance is plus or minus 2 degrees
- Hole dimensions for standard solid rivets and fasteners are in Structural Repair Manual (SRM) Chapter 51
- Torque Values:
  - Values for structural fasteners are given in 737 Structural Repair Manual, Chapter 51.
  - Values for airframe maintenance tasks are included in Chapter 20 of 737 Aircraft Maintenance Manual (AMM).
  - Non-standard torque values for maintenance tasks are included in the applicable installation step.

5. These work instructions refer to procedures included in other Boeing documents. When the words "refer to" are used and the operator has an accepted alternative procedure, the accepted alternative procedure can be used. When the words "in accordance with" are included in the instruction, the procedure in the Boeing document must be used.

Export Controlled ECCN: 9E991
Copyright © Unpublished
Work - See page 1 for details.

6. Where the work instructions include installation of a kept part, a new or serviceable part with the same part number can be installed as an alternative to the kept part.

7. If it is necessary to remove more parts for access, you can remove those parts. If you can get access without removing identified parts, it is not necessary to remove all of the identified parts. Jacking and shoring limitations must be observed.

8. Use the approved fastener, process and material substitutions in accordance with SRM Chapter 51.

9. If the length of any fastener specified in this service bulletin does not meet installation standards given in SRM Chapter 51, then a fastener of the same specification, or an approved substitute, with a length which meets the installation standards given in SRM Chapter 51 may be used. In addition, washers may be installed for fastener grip length in accordance with SRM Chapter 51. Refer to SOPM 20-50-01 for alternate full threaded fasteners (screws) needed for installation in this service bulletin.

10. The work instructions are divided into work packages. Each work package can be completed independently during separate maintenance visits.

11. When more than one OPTION is given for a CONDITION, do only one of the OPTION numbers. When more than one ACTION is given for a CONDITION or an OPTION, do all of the ACTION numbers for that CONDITION or OPTION.

B. WORK INSTRUCTIONS

Actions Required for Compliance:

1. Requirements:

Export Controlled ECCN: 9E991
Copyright © Unpublished
Work - See page 1 for details.

Table 1: Work Package 1: Captain's Rudder Pedal Shroud Assemblies and Upper Cover Assembly - Change

Condition	Action	Method of Compliance	Refer to the listed procedures in SB 737-27A1314 Original Issue or later approved revisions as an accepted procedure
All Airplanes	Remove the Captain's rudder pedal shroud assemblies and upper cover assembly.	-	Do Work Package 1, PART 1: Preparation, Access and Removal.
	OPTION 1 (ACTION 1): Change the Captain's rudder pedal upper cover assembly.	FIGURE 3	-
	OPTION 1 (ACTION 2): Change the Captain's rudder pedal shroud assemblies.	FIGURE 4	-
	OPTION 1 (ACTION 3): Install the Captain's rudder pedal changed shroud assemblies and changed upper cover assembly.	-	Do Work Package 1, PART 2: Installation, Test and Close Access.
	OPTION 2 (ACTION 1): Change the Captain's rudder pedal shroud assemblies.	FIGURE 4	-
	OPTION 2 (ACTION 2): Install the Captain's rudder pedal changed shroud assemblies and a new upper cover assembly.	-	Do Work Package 1, PART 2: Installation, Test and Close Access.

Export Controlled ECCN: 9E991
Copyright © Unpublished
Work - See page 1 for details.

Table 2: Work Package 2: First Officer's Rudder Pedal Shroud Assemblies and Upper Cover Assembly - Change

Condition	Action	Method of Compliance	Refer to the listed procedures in SB 737-27A1314 Original Issue or later approved revisions as an accepted procedure
All Airplanes	Remove the First Officer's rudder pedal shroud assemblies and upper cover assembly.	-	Do Work Package 2, PART 1: Preparation, Access and Removal.
	OPTION 1 (ACTION 1): Change the First Officer's rudder pedal upper cover assembly.	FIGURE 10	-
	OPTION 1 (ACTION 2): Change the First Officer's rudder pedal shroud assemblies.	FIGURE 11	-
	OPTION 1 (ACTION 3): Install the First Officer's rudder pedal changed shroud assemblies and changed upper cover assembly.	-	Do Work Package 2, PART 2: Installation, Test and Close Access.
	OPTION 2 (ACTION 1): Change the First Officer's rudder pedal shroud assemblies.	FIGURE 11	-
	OPTION 2 (ACTION 2): Install the First Officer's rudder pedal changed shroud assemblies and a new upper cover assembly.	-	Do Work Package 2, PART 2: Installation, Test and Close Access.

Export Controlled ECCN: 9E991
Copyright © Unpublished
Work - See page 1 for details.

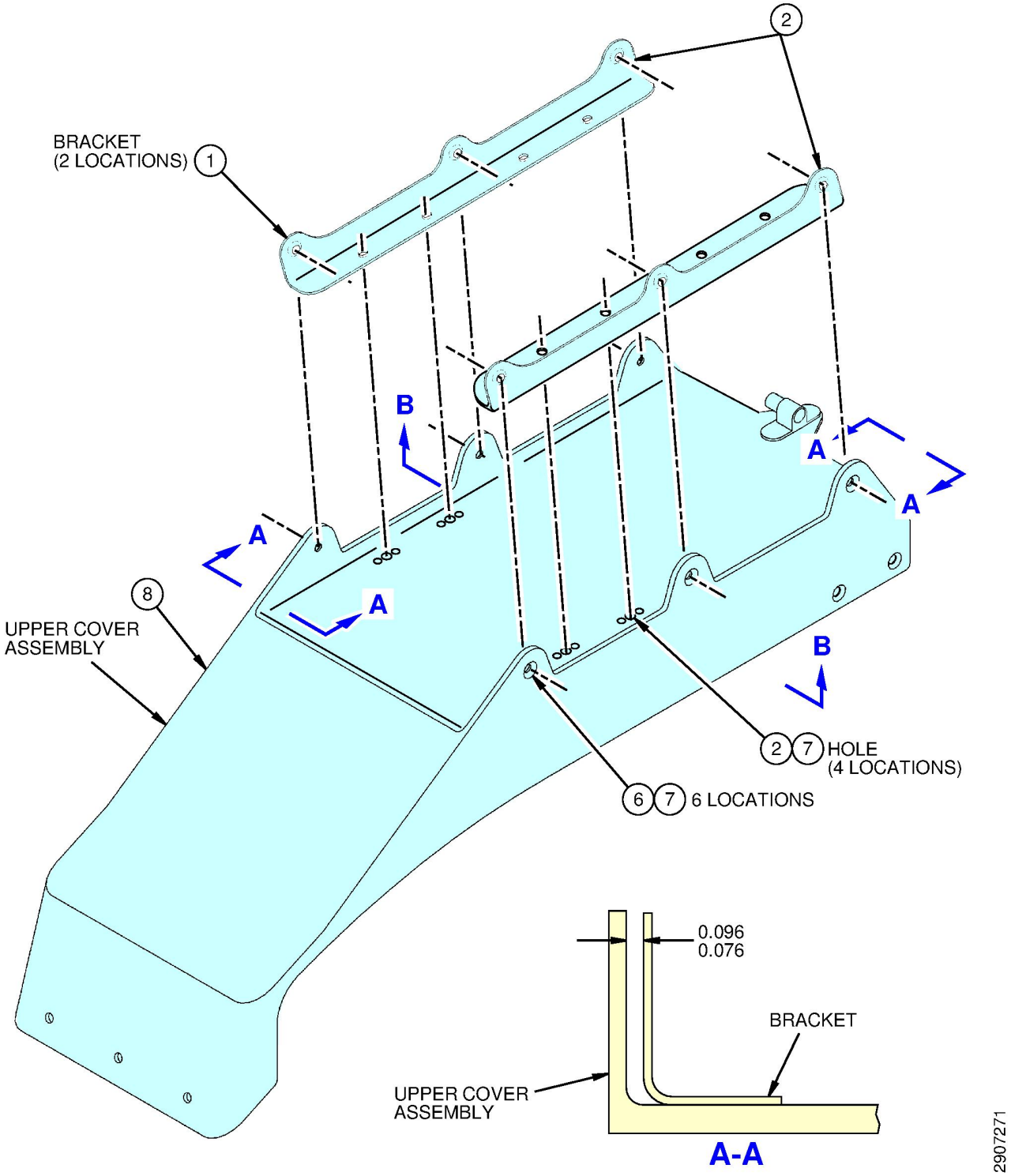

FIGURE 3: CAPTAIN'S RUDDER PEDAL UPPER COVER ASSEMBLY - CHANGE (SHEET 1 OF 4)

Export Controlled ECCN: 9E991
Copyright © Unpublished
Work - See page 1 for details.

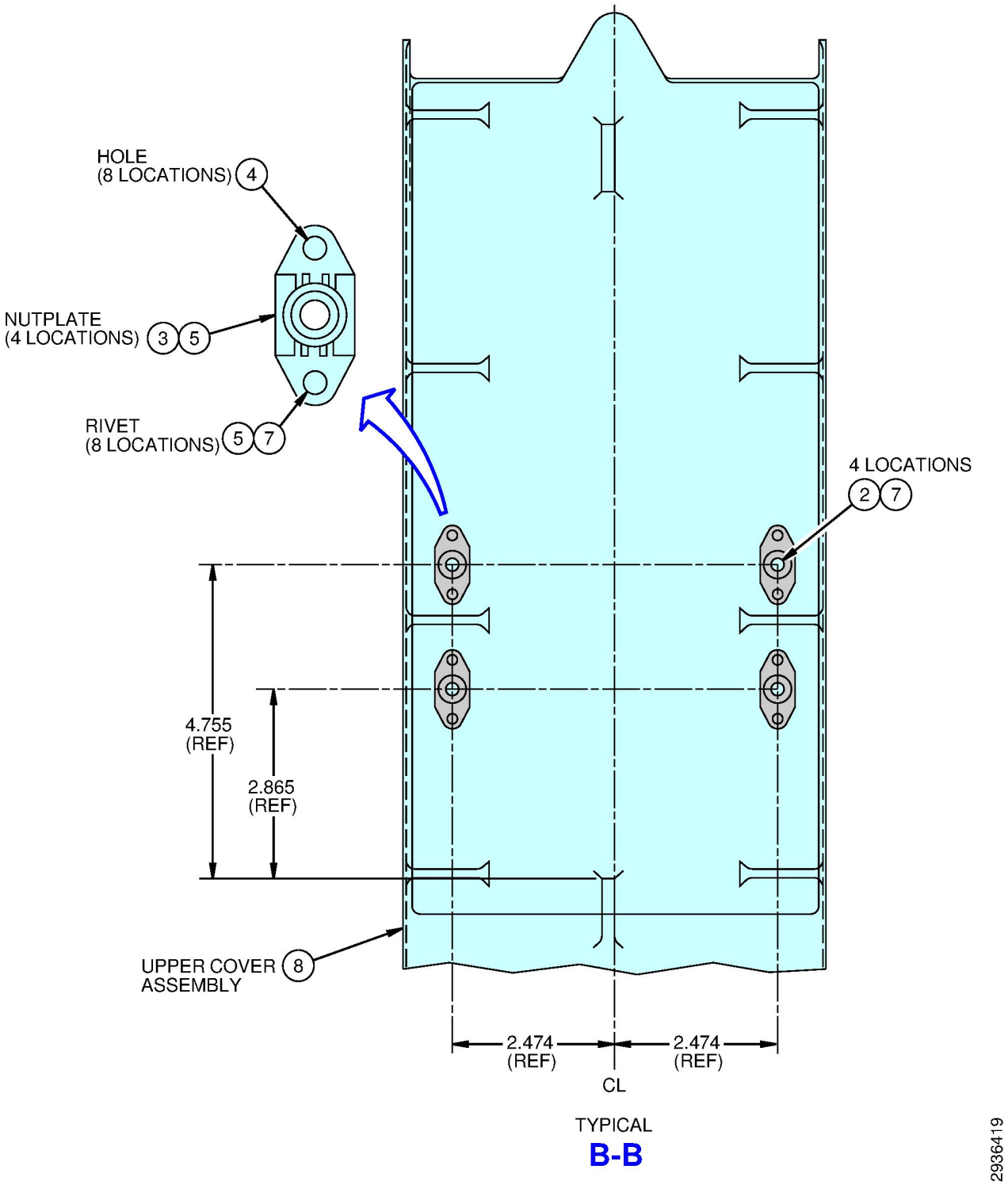

FIGURE 3: CAPTAIN'S RUDDER PEDAL UPPER COVER ASSEMBLY - CHANGE (SHEET 2 OF 4)

Export Controlled ECCN: 9E991
Copyright © Unpublished
Work - See page 1 for details.

The step numbers shown below agree with the numbers shown in the circle symbols in the figure. The QTY numbers shown below are the number of parts necessary for this figure.

Step	Task	Name	Identification	Qty	More Data
1	Put / Hold	SHROUD - FORWARD PANEL, BRACKET	233A2373-7	2	On the upper cover assembly as shown.
2	Drill	HOLE	-	4	(a)
	Release	SHROUD - FORWARD PANEL, BRACKET	233A2373-7	2	-
	Deburr	HOLE	-	4	(a)
3	Put / Hold	NUTPLATE	BACN10JR3CFD	4	(b)
4	Drill	HOLE	-	8	(c)
	Deburr	HOLE	-	8	(c)
5	Install (New)	NUTPLATE	BACN10JR3CFD	4	-
	Install (New)	RIVET, BLIND	BACR15DR3AN2	8	(d)
6	Countersink	HOLE	-	6	(d)
	Install (New)	RIVET, 100 DEG	BACR15BA6AD5C	6	(d)(g)
7	Apply	CHEMICAL CONVERSION COATING	TYPE 2, CLASS A	-	Refer to SOPM 20-43-03 as an accepted procedure. (e)
	Apply	PRIMER	BMS 10-11, TYPE 1	-	Refer to SOPM 20-41-02 as an accepted procedure. (e)
	Apply	ENAMEL	BMS 10-11, TYPE 2 (BMS 10-83, TYPE 3 optional)	-	Refer to SOPM 20-41-02 or SOPM 20-41-04 as an accepted procedure. (e)
8	Identify	UPPER COVER ASSY	251A3122-( )	1	(f)

(a) Match drill and deburr the hole into the upper cover assembly with the hole in the bracket. The hole diameter is 0.218 - 0.229.

(b) Align the center hole of the nutplate with the hole in the upper cover assembly and align the nutplate as shown.

(c) The hole diameter is 0.098 - 0.103.

(d) Refer to 737-600 SRM 51-40-02, 737-700 SRM 51-40-02, 737-800 SRM 51-40-02, 737-900 SRM 51-40-02 or 737-900ER SRM 51-40-02 and 737-600 SRM 51-40-08, 737-700 SRM 51-40-08, 737-800 SRM 51-40-08, 737-900 SRM 51-40-08 or 737-900ER SRM 51-40-08 as an accepted procedure.

(e) Manually apply chemical conversion coating, then apply 1 coat of primer and then apply 1 coat of enamel (color BAC 703 Gray) to the rivets and any bare metal surfaces to repair finish.

FIGURE 3: CAPTAIN'S RUDDER PEDAL UPPER COVER ASSEMBLY - CHANGE (SHEET 3 OF 4)

Export Controlled ECCN: 9E991
Copyright © Unpublished
Work - See page 1 for details.

ALERT **ALERT**

Step	Task	Name	Identification	Qty	More Data
(f)	Apply service bulletin number 737-27A1314 near the upper cover assembly part number. Refer to SOPM 20-50-10, RUBBER STAMP (CODE RO), as an accepted procedure.				
(g)	Double-flush countersink rivet tail to 0.00 to 0.01 inches. Refer to 737-600 SRM 51-40-02, 737-700 SRM 51-40-02, 737-800 SRM 51-40-02, 737-900 SRM 51-40-02 or 737-900ER SRM 51-40-02 as an accepted procedure.				

FIGURE 3: CAPTAIN'S RUDDER PEDAL UPPER COVER ASSEMBLY - CHANGE (SHEET 4 OF 4)

Export Controlled ECCN: 9E991
Copyright © Unpublished
Work - See page 1 for details.

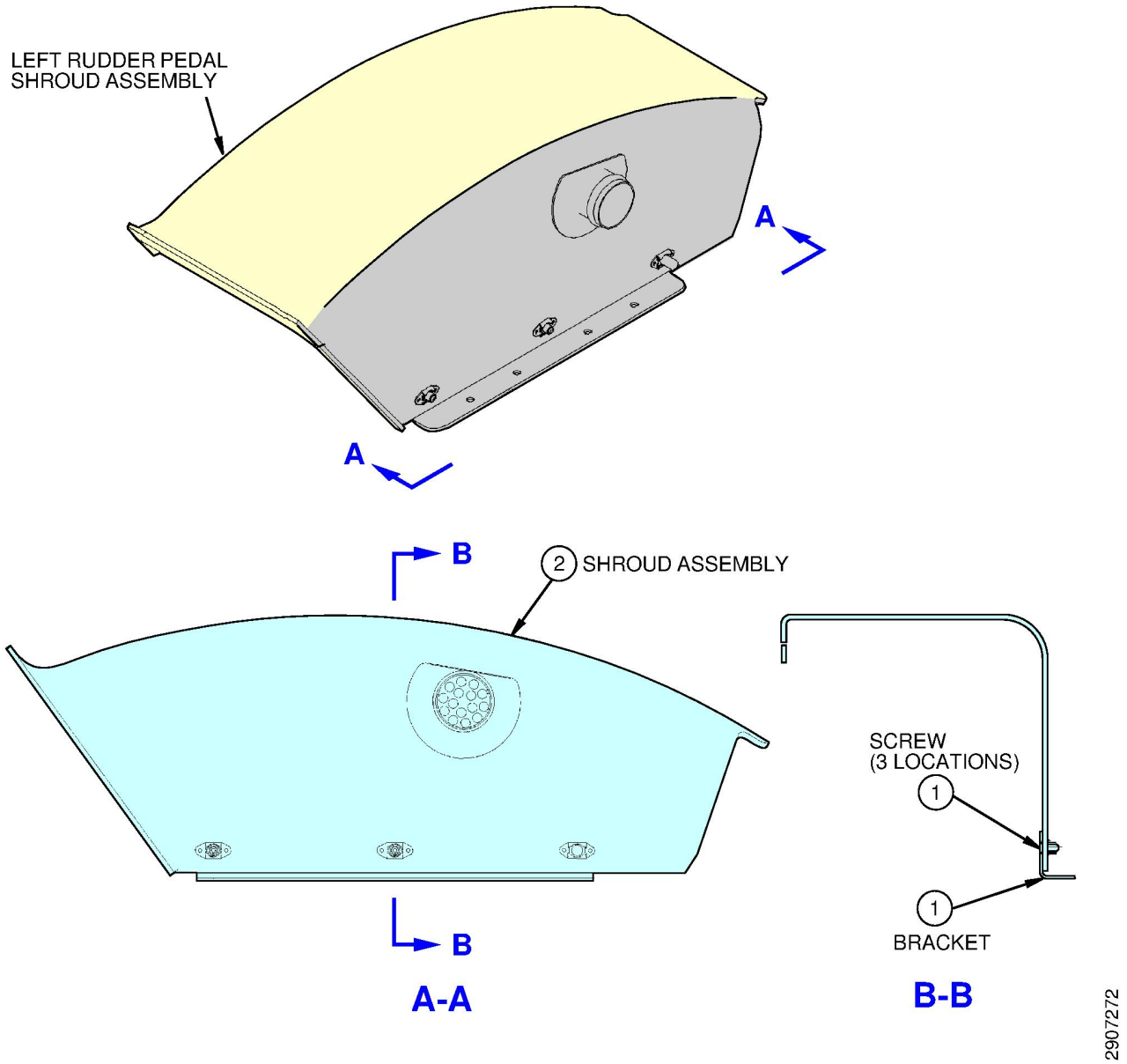

FIGURE 4: CAPTAIN'S RUDDER PEDAL SHROUD ASSEMBLIES - CHANGE (SHEET 1 OF 3)

Export Controlled ECCN: 9E991
Copyright © Unpublished
Work - See page 1 for details.

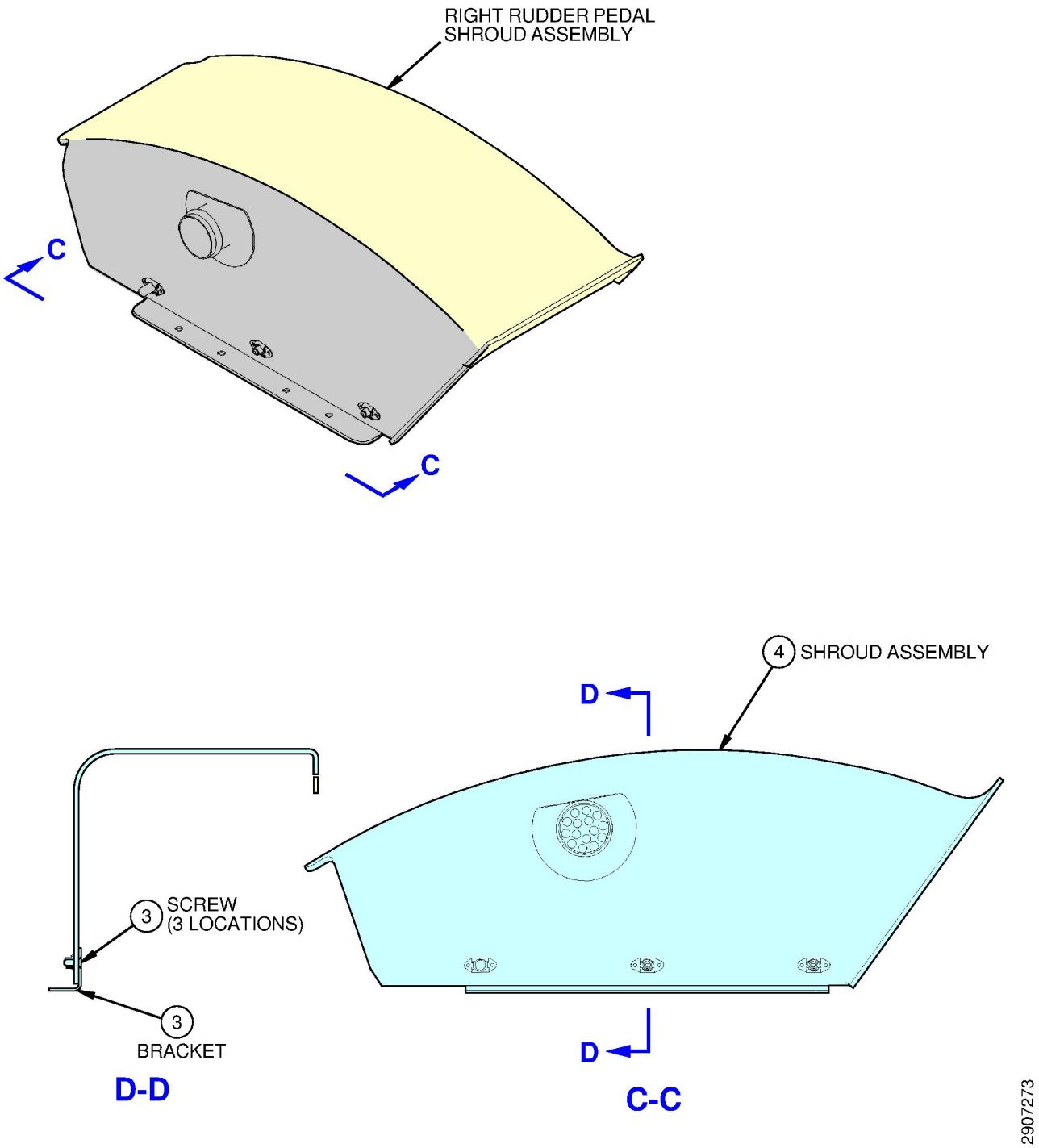

FIGURE 4: CAPTAIN'S RUDDER PEDAL SHROUD ASSEMBLIES - CHANGE (SHEET 2 OF 3)

Export Controlled ECCN: 9E991
Copyright © Unpublished
Work - See page 1 for details.

The step numbers shown below agree with the numbers shown in the circle symbols in the figure. The QTY numbers shown below are the number of parts necessary for this figure.

Step	Task	Name	Identification	Qty	More Data
1	Install (New)	SHROUD - FORWARD PANEL, BRACKET	233A2373-7	1	-
	Install (New)	SCREW, 100 DEG HEAD	BACS12ER3K8	3	(a)
2	Identify	SHROUD ASSY	233A2319-( )	1	(b)
3	Install (New)	SHROUD - FORWARD PANEL, BRACKET	233A2373-7	1	-
	Install (New)	SCREW, 100 DEG HEAD	BACS12ER3K8	3	(a)
4	Identify	SHROUD ASSY	233A2319-( )	1	(c)
(a) Refer to SOPM 20-50-01 as an accepted procedure for fastener installation.					
(b) For a changed 233A2319-1 or 233A2319-3, apply service bulletin number 737-27A1314 near the shroud assembly part number. Refer to SOPM 20-50-10, PART MARK M (CODE M), as an accepted procedure.					
(c) For a changed 233A2319-2 or 233A2319-4, apply service bulletin number 737-27A1314 near the shroud assembly part number. Refer to SOPM 20-50-10, PART MARK M (CODE M), as an accepted procedure.					

FIGURE 4: CAPTAIN'S RUDDER PEDAL SHROUD ASSEMBLIES - CHANGE (SHEET 3 OF 3)

Export Controlled ECCN: 9E991
Copyright © Unpublished
Work - See page 1 for details.

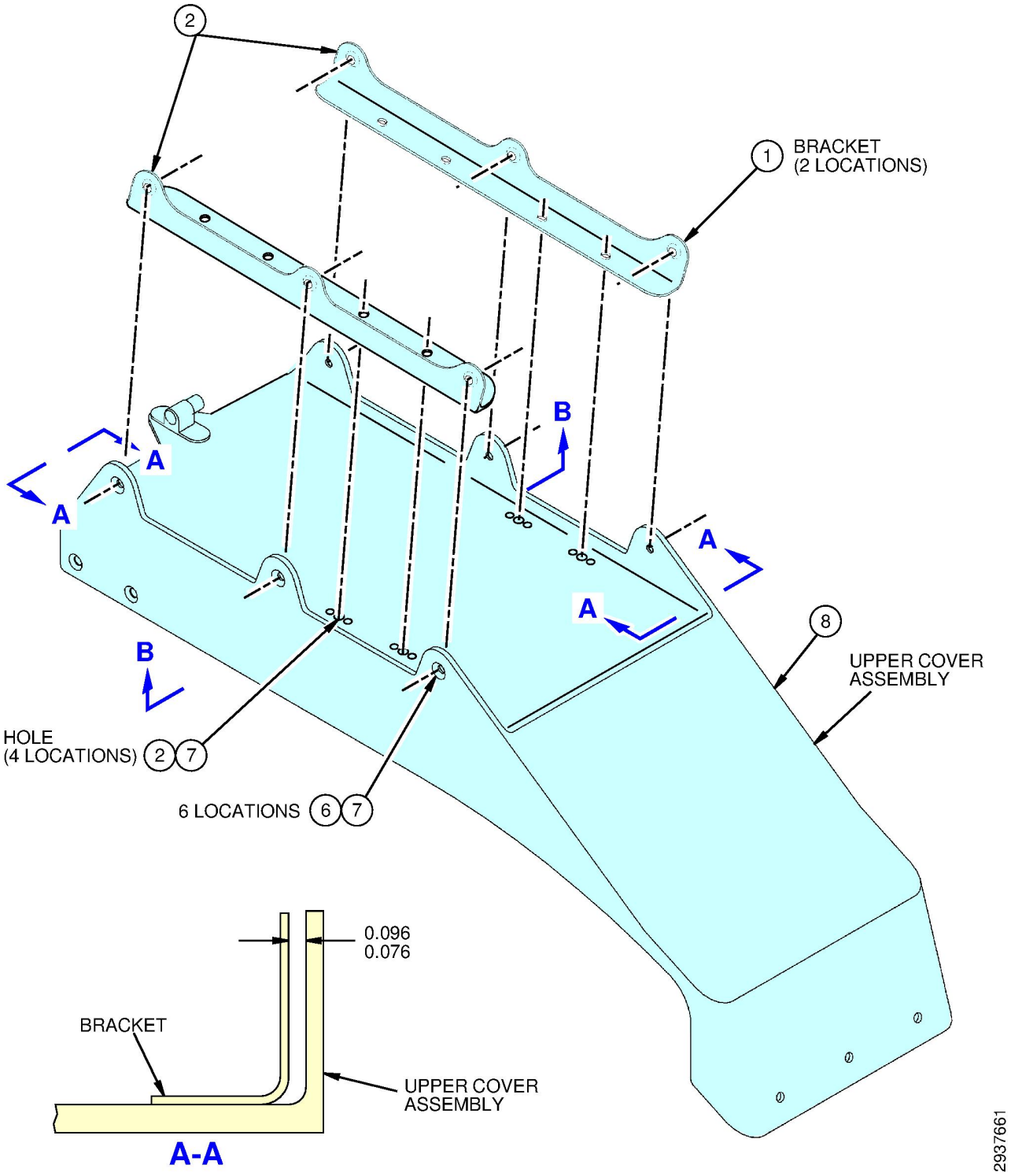

FIGURE 10: FIRST OFFICER'S RUDDER PEDAL UPPER COVER ASSEMBLY - CHANGE (SHEET 1 OF 4)

Export Controlled ECCN: 9E991
Copyright © Unpublished
Work - See page 1 for details.

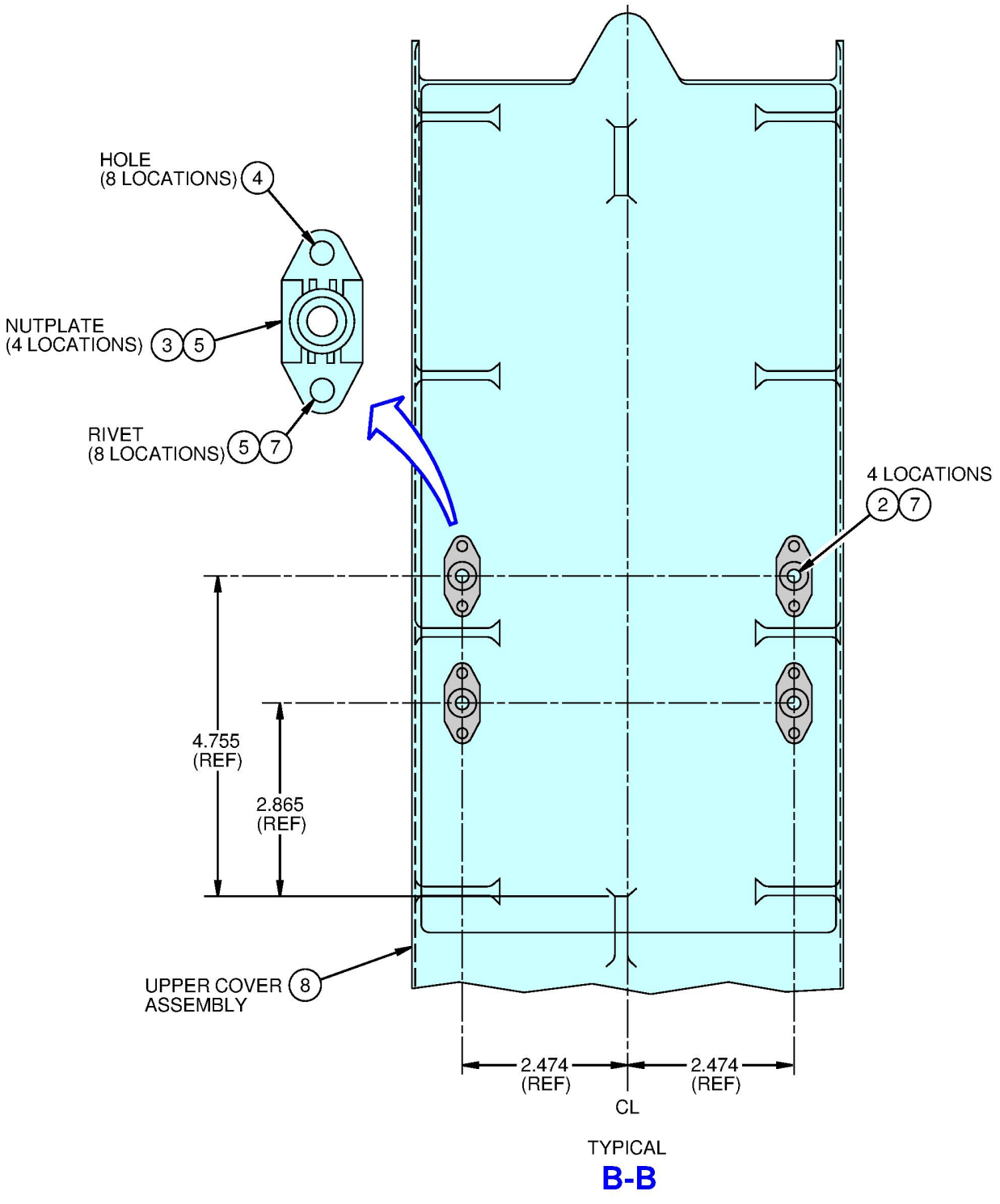

FIGURE 10: FIRST OFFICER'S RUDDER PEDAL UPPER COVER ASSEMBLY - CHANGE (SHEET 2 OF 4)

Export Controlled ECCN: 9E991
Copyright © Unpublished
Work - See page 1 for details.

The step numbers shown below agree with the numbers shown in the circle symbols in the figure. The QTY numbers shown below are the number of parts necessary for this figure.

Step	Task	Name	Identification	Qty	More Data
1	Put / Hold	SHROUD - FORWARD PANEL, BRACKET	233A2373-7	2	On the upper cover assembly as shown.
2	Drill	HOLE	-	4	(a)
	Release	SHROUD - FORWARD PANEL, BRACKET	233A2373-7	2	-
	Deburr	HOLE	-	4	(a)
3	Put / Hold	NUTPLATE	BACN10JR3CFD	4	(b)
4	Drill	HOLE	-	8	(c)
	Deburr	HOLE	-	8	(c)
5	Install (New)	NUTPLATE	BACN10JR3CFD	4	-
	Install (New)	RIVET, BLIND	BACR15DR3AN2	8	(d)
6	Countersink	HOLE	-	6	(d)
	Install (New)	RIVET, 100 DEG	BACR15BA6AD5C	6	(d)(g)
7	Apply	CHEMICAL CONVERSION COATING	TYPE 2, CLASS A	-	Refer to SOPM 20-43-03 as an accepted procedure. (e)
	Apply	PRIMER	BMS 10-11, TYPE 1	-	Refer to SOPM 20-41-02 as an accepted procedure. (e)
	Apply	ENAMEL	BMS 10-11, TYPE 2 (BMS 10-83, TYPE 3 optional)	-	Refer to SOPM 20-41-02 or SOPM 20-41-04 as an accepted procedure. (e)
8	Identify	UPPER COVER ASSY	251A3122-( )	1	(f)

(a) Match drill and deburr the hole into the upper cover assembly with the hole in the bracket. The hole diameter is 0.218 - 0.229.

(b) Align the center hole of the nutplate with the hole in the upper cover assembly and align the nutplate as shown.

(c) The hole diameter is 0.098 - 0.103.

(d) Refer to 737-600 SRM 51-40-02, 737-700 SRM 51-40-02, 737-800 SRM 51-40-02, 737-900 SRM 51-40-02 or 737-900ER SRM 51-40-02 and 737-600 SRM 51-40-08, 737-700 SRM 51-40-08, 737-800 SRM 51-40-08, 737-900 SRM 51-40-08 or 737-900ER SRM 51-40-08 as an accepted procedure.

(e) Manually apply chemical conversion coating, then apply 1 coat of primer and then apply 1 coat of enamel (color BAC 703 Gray) to the rivets and any bare metal surfaces to repair finish.

FIGURE 10: FIRST OFFICER'S RUDDER PEDAL UPPER COVER ASSEMBLY - CHANGE (SHEET 3 OF 4)

Export Controlled ECCN: 9E991
Copyright © Unpublished
Work - See page 1 for details.

Step	Task	Name	Identification	Qty	More Data
(f) Apply service bulletin number 737-27A1314 near the upper cover assembly part number. Refer to SOPM 20-50-10, RUBBER STAMP (CODE RO), as an accepted procedure.					
(g) Double-flush countersink rivet tail to 0.00 to 0.01 inches. Refer to, 737-700 SRM 51-40-02, 737-800 SRM 51-40-02, 737-900 SRM 51-40-02 or 737-900ER SRM 51-40-02 as an accepted procedure.					

FIGURE 10: FIRST OFFICER'S RUDDER PEDAL UPPER COVER ASSEMBLY - CHANGE (SHEET 4 OF 4)

Export Controlled ECCN: 9E991
Copyright © Unpublished
Work - See page 1 for details.

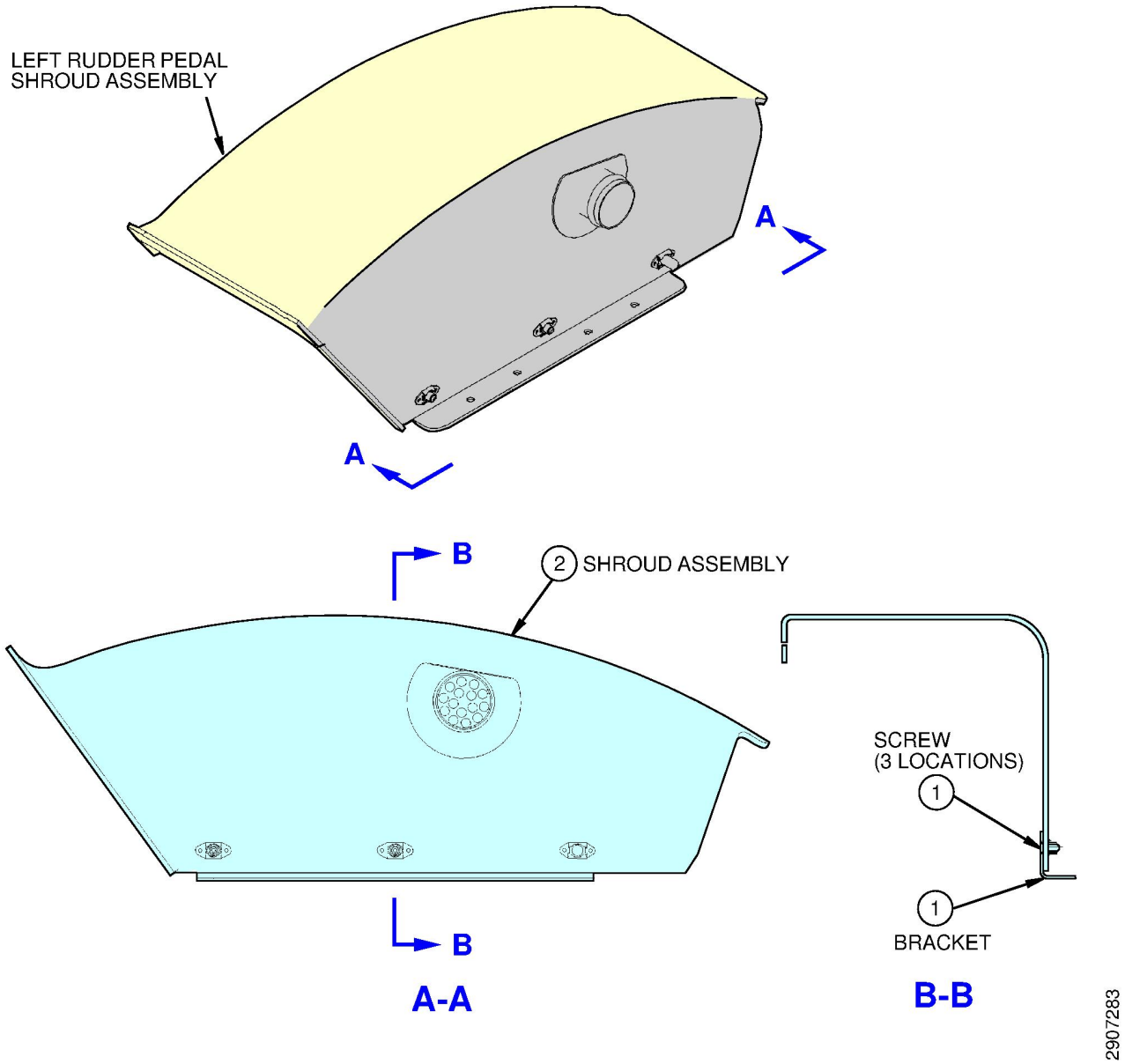

FIGURE 11: FIRST OFFICER'S RUDDER PEDAL SHROUD ASSEMBLIES - CHANGE (SHEET 1 OF 3)

Export Controlled ECCN: 9E991
Copyright © Unpublished
Work - See page 1 for details.

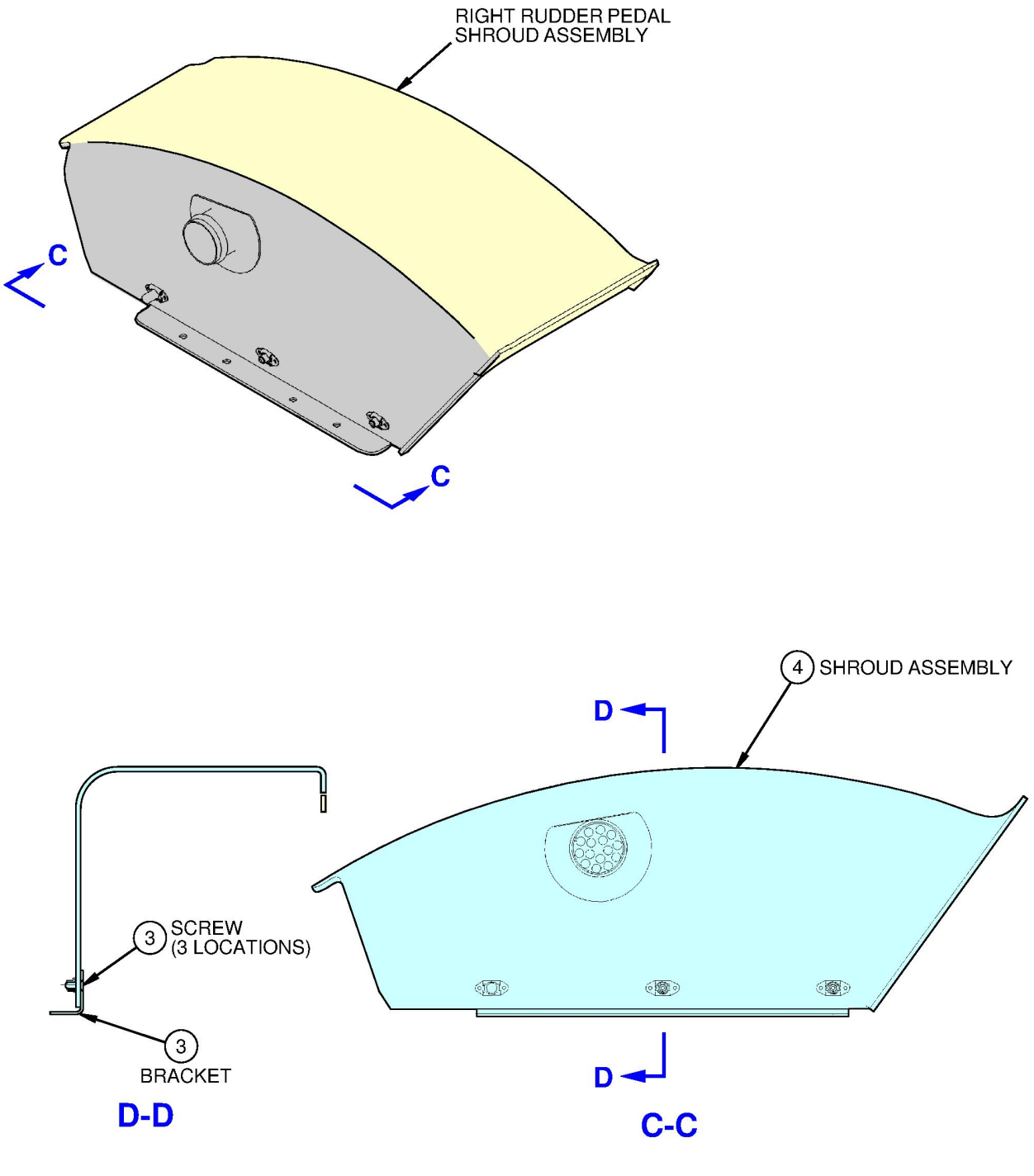

FIGURE 11: FIRST OFFICER'S RUDDER PEDAL SHROUD ASSEMBLIES - CHANGE (SHEET 2 OF 3)

Export Controlled ECCN: 9E991
Copyright © Unpublished
Work - See page 1 for details.

ALERT **ALERT**

The step numbers shown below agree with the numbers shown in the circle symbols in the figure. The QTY numbers shown below are the number of parts necessary for this figure.

Step	Task	Name	Identification	Qty	More Data
1	Install (New)	SHROUD - FORWARD PANEL, BRACKET	233A2373-7	1	(a)
	Install (New)	SCREW, 100 DEG HEAD	BACS12ER3K8	3	(a)
2	Identify	SHROUD ASSY	233A2319-( )	1	(b)
3	Install (New)	SHROUD - FORWARD PANEL, BRACKET	233A2373-7	1	-
	Install (New)	SCREW, 100 DEG HEAD	BACS12ER3K8	3	(a)
4	Identify	SHROUD ASSY	233A2319-( )	1	(c)

(a) Refer to SOPM 20-50-01 as an accepted procedure for fastener installation.

(b) For a changed 233A2319-1 or 233A2319-3, apply service bulletin number 737-27A1314 near the shroud assembly part number. Refer to SOPM 20-50-10, PART MARK M (CODE M), as an accepted procedure.

(c) For a changed 233A2319-2 or 233A2319-4, apply service bulletin number 737-27A1314 near the shroud assembly part number. Refer to SOPM 20-50-10, PART MARK M (CODE M), as an accepted procedure.

FIGURE 11: FIRST OFFICER'S RUDDER PEDAL SHROUD ASSEMBLIES - CHANGE (SHEET 3 OF 3)

Export Controlled ECCN: 9E991
Copyright © Unpublished
Work - See page 1 for details.